10 Handy Drill Press Tips

Arts & Crafts Clock • Barrister's CD Cases • Clamp Storage

Woodsmith®

Vol. 23 / No. 137

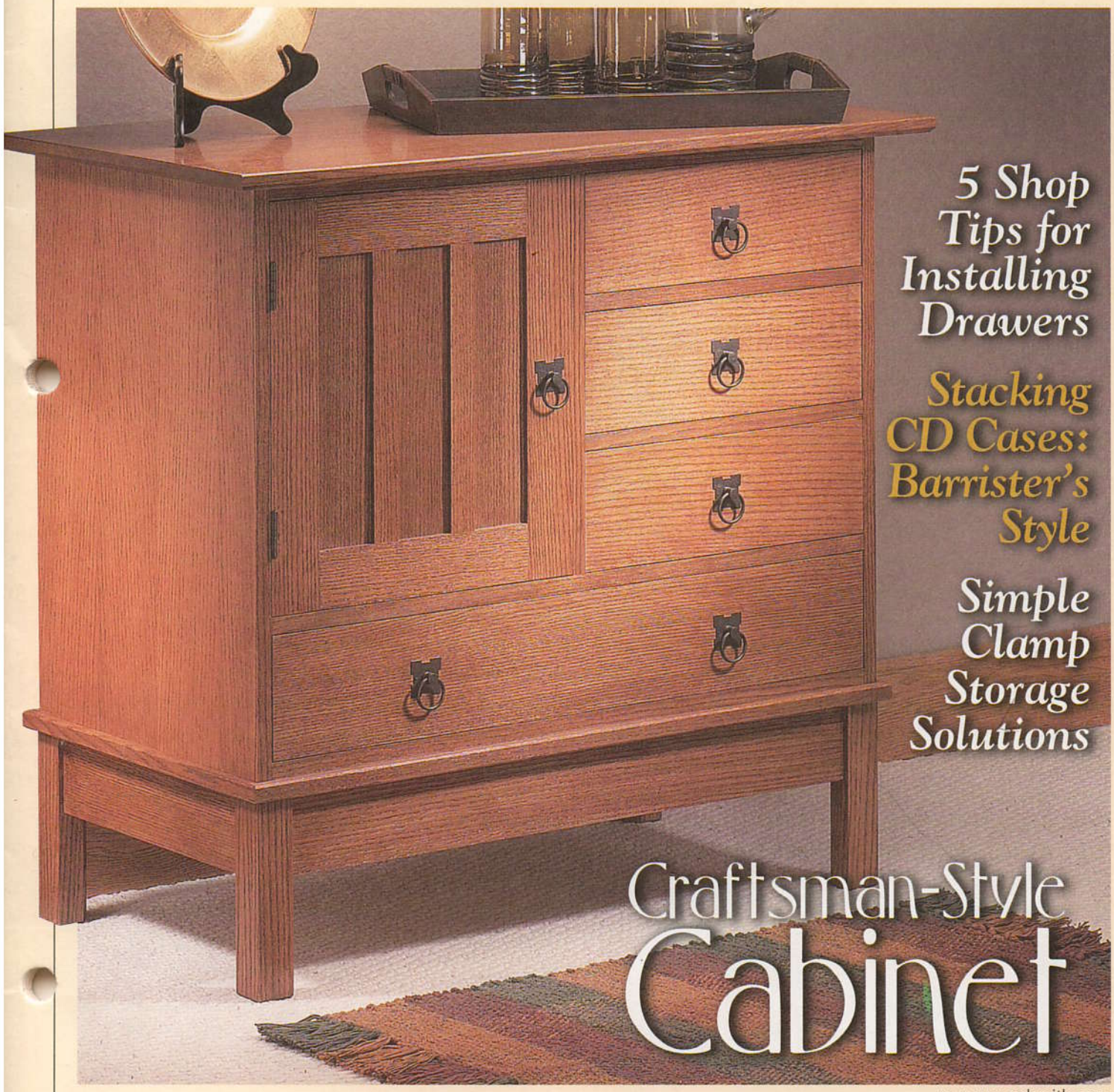

5 Shop Tips for Installing Drawers

Stacking CD Cases: Barrister's Style

Simple Clamp Storage Solutions

Craftsman-Style Cabinet

www.woodsmith.com

Woodsmith

No. 137 October, 2001

Publisher Donald B. Peschke
Editor Terry J. Strohman
Senior Editor Jon Garbison
Assistant Editor Brian McCallum
Contrib. Editor Craig Ruegsegger
Art Director Todd Lambirth
Senior Illustrators David Kreyling, Dirk Ver Steeg, Harlan V. Clark
Graphic Intern Jonathan Eike

CREATIVE RESOURCES
Creative Director: Ted Kralicek • *Project Developer:* Ken Munkel • *Project Designers:* Chris Fitch, Craig Iseke • *Shop Craftsmen:* Steve Curtis, Steve Johnson • *Sr. Photographer:* Crayola England

SPECIAL PUBLICATIONS
Corp VP: Douglas L. Hicks • *Art Director:* Douglas A. Flint • *Senior Graphic Designer:* Chris Glowacki • *Assoc. Editor:* Craig Ruegsegger • *Assistant Editors:* Joel A. Hess, Joseph E. Irwin • *Graphic Designer:* Vu Nguyen • *Graphic Intern:* Matt O'Gara

CIRCULATION
Subscriber Services Director: Sandy Baum • *New Business Manager:* Wayde Klingbeil • *Multi-media Promotion Manager:* Rick Junkins • *Promotion Analyst:* Patrick Walsh • *Renewal Mgr.:* Paige Rogers • *Billing & Collections Manager:* Rebecca Cunningham • *Circ. Marketing Analyst:* Kris Schlemmer • *Assoc. Circ. Marketing Analyst:* Paula M. DeMatteis • *Sr. Graphic Designers:* Mark Hayes, Robin Friend

CORPORATE SERVICES
VP of Finance: Mary R. Scheve • *Controller:* Robin Hutchinson • *Sr. Account.:* Laura Thomas • *Accts. Payable:* Mary J. Schultz • *Accts. Receivable:* Margo Petrus • *Production Dir.:* George Chmielarz • *Electronic Publishing Director:* Douglas M. Lidster • *Network Administrator:* Cris Schwanebeck • *Pre-press Image Specialists:* Troy A. Clark, Minniette Johnson • *New Media Mgr.:* Gordon C. Gaippe • *Web Site Art Dir.:* Gene Pedersen • *Technology Analyst:* Carol Schoeppler • *Web Content Mgrs.:* David Briggs, Sue M. Moe • *Web Designer:* Kara Blessing • *Professional Development Dir.:* Michal Sigel • *H.R. Asst.:* Kirsten Koele • *Office Mgr.:* Noelle Carroll • *Administrative Asst.:* Evy Beneda • *Receptionist:* Jeanne Johnson • *Mail Room/Delivery:* Lou Webber

WOODSMITH MAIL ORDER
Operations Director: Bob Baker • *Customer Service Mgr.:* Jennie Enos • *Warehouse Supr.:* Nancy Johnson • *Buyer:* Linda Jones • *Tech. Service Rep.:* Johnny Audette • *Admin. Assist.:* Nancy Downey • *Cust. Serv. Reps.:* Tammy Truckenbrod, Ed Arthur, Anna Cox, Deborah Rich, April Revell, Valerie Riley, Linda Stepp • *Warehouse:* Sylvia Carey, Nancy Connelly, Mary Couch, Dustin Hess, Sheryl Knox, Al Voigt

WOODSMITH STORE
Mgr.: Dave Larson • *Asst. Manager:* Tim Thelen • *Sales Staff:* Wendell Stone, Jim Barnett, Larry Morrison, Harold Cashman, Mark Johnson, Gregory Kauzlarich, Joe Kucera • *Office Mgr.:* Vicki Edwards

Woodsmith® (ISSN 0164-4114) is published bimonthly (Feb., Apr., June, Aug., Oct., Dec.) by August Home Publishing Company, 2200 Grand, Des Moines, IA 50312.

Woodsmith® is a registered trademark of August Home Publishing.
Copyright© 2001 August Home Publishing Company. All rights reserved.

Subscriptions: Single copy: $4.95. One year subscription (6 issues), $24.95. (Canada/International add $10 per year, U.S. funds.)
Periodicals Postage Paid at Des Moines, IA and at additional offices. USPS/Perry-Judd's Heartland Division Automatable Poly.
Postmaster: Send change of address to *Woodsmith*, Box 37112, Boone, IA 50037-2112.
Subscription Questions? Write to *Woodsmith*, P.O. Box 842, Des Moines, IA 50304-9961 or call 1-800-333-5075, 8:00 am to 5:00 pm, Central Time, weekdays. Or send an e-mail to: orders@woodsmith.com
E-Mail: woodsmith@woodsmith.com
World Wide Web: http://www.woodsmith.com

Printed in U.S.A.

SAWDUST

Typically, we like to start planning for *Woodsmith* projects a year or more before they appear in the magazine. But sometimes a good idea for a project comes up unexpectedly, and I just can't wait a whole year to share it. And that's exactly what happened with one of the projects in this issue.

Not too long ago, a bunch of us were discussing the design of the Barrister's Bookcase that was featured in *Woodsmith* No. 134. This project was based on those old-fashioned, stacking bookcases you often find in an attorney's office.

At some point in the discussion, Ken Munkel (our project developer) said, "You know, it would be neat if we could shrink these bookcases down and use them for storing CDs."

No one said anything for a few seconds as we mulled over the idea. Then suddenly, as if someone flipped a switch, everybody was talking at once. We all agreed, a CD case based on a barrister's bookcase sounded like a good idea. And the timing was perfect — there was still plenty of time to build it before the holidays.

We wanted our scaled-down version to have the same features as the full-size one — glass doors that flip up and slide out of the way and individual cases that can stack on top of one another quickly and securely. And as you might have guessed, incorporating these features in a smaller project presented a few design challenges.

For instance, you can't simply shrink down the joinery that was used to build the full-size version. The parts would be too small to work with safely and efficiently. So for this project, we simplified the joinery: stopped dadoes, rabbets, and half laps. All of which can be created on a router table with a couple straight bits.

Of course, the barrister's CD case isn't the only project in this issue. There's also a unique Craftsman-style cabinet, a handsome mantel clock, and some clamp storage ideas. I think these are all great projects, but I'd really like to know what you think about them. So we've created a short online survey, and we're hoping you'll take the time to give us some feedback. (See the box below.)

Terry

Woodsmith Reader's Review

What do you think about the projects in this issue? Are the step-by-step instructions clear? Are the tips helpful? We do our best to make each issue of *Woodsmith* a great "tool" for you to use in your shop. And we'd really like to know what you think of this issue. So we've created an online survey that will give you the chance to give us some feedback. To find it, simply log on to the *Woodsmith* web site: **www.Woodsmith.com**.

Woodsmith Reader's Review

And if you don't have access to the internet, we'd be happy to mail you the survey. Simply send us a SASE to *Woodsmith* Readers' Review, August Home Publishing, 2200 Grand Ave., Des Moines, IA 50312.

A LOOK INSIDE

CONTENTS

Features

Craftsman-Style Cabinet 6

Like many other Craftsman projects, this cabinet looks great and is full of practical storage space. And the wide variety of woodworking techniques will provide just the right challenge.

Five Drawer Installation Tips 13

You've got the drawer built, now what? Here are five shop-tested tips for installing drawers. Learn the secrets to installing metal slides properly, getting an inset drawer flush with the face of a cabinet, and positioning a false front quickly and accurately.

Arts & Crafts Clock 18

Whether you build one for yourself or several to give away as gifts, this handsome timepiece doesn't require much wood or hardware. It's a great reason to spend a few hours in the shop.

Barrister's CD Cases 22

This miniature version of a barrister's bookcase works just like the full-sized originals. The sections easily stack on top of each other. And the doors flip up and slide out of the way for easy access.

Clamp Storage 28

Some scrap plywood and an afternoon in the shop are all you need to get your clamps organized. And this storage "system" can grow as you buy more clamps. Plus, check out our mobile clamp caddy.

Ten Drill Press Tips 32

Are you ready to make your work at the drill press quicker, more accurate, and more versatile? Here are ten of our favorite tips that will help you do just that.

Departments

Tips & Techniques 4
Shop Notes 16
Sources 35

Craftsman Cabinet *page 6*

Barrister's CD Cases *page 22*

Arts & Crafts Clock *page 18*

Clamp Storage *page 28*

TIPS & TECHNIQUES

Tapering Jig

Recently I was making a set of small tables, and the designed called for tapered legs. The jig I ended up making was a little different than the ones that I've seen in many books. It uses similar ideas as other tapering jigs, but it rides in the miter slot of the table saw. I've found that it works just as well as jigs that ride along the rip fence.

As you can see in the drawing, the jig is an oversized piece of plywood with a groove on the bottom for a hardwood runner. Since the miter slot location can vary slightly from one saw to the next, the oversized base can be trimmed to fit the saw.

The length of the jig depends on the length of the pieces getting tapered. I made mine 30" long, so it will work for most standard table legs.

Cleats attached to the top align the workpiece to the edge at a slight angle (see detail). The cleats can easily be set for any angle.

To hold the blanks in place, I use double-sided carpet tape. And a coat of wax on the bottom of the jig helps it glide smoothly across the saw table.

Rusty Brett
Houston, Texas

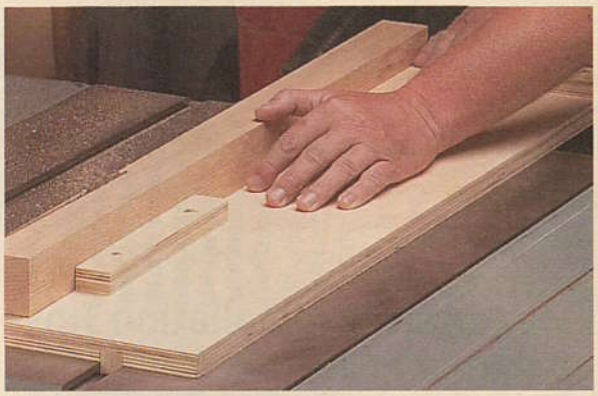

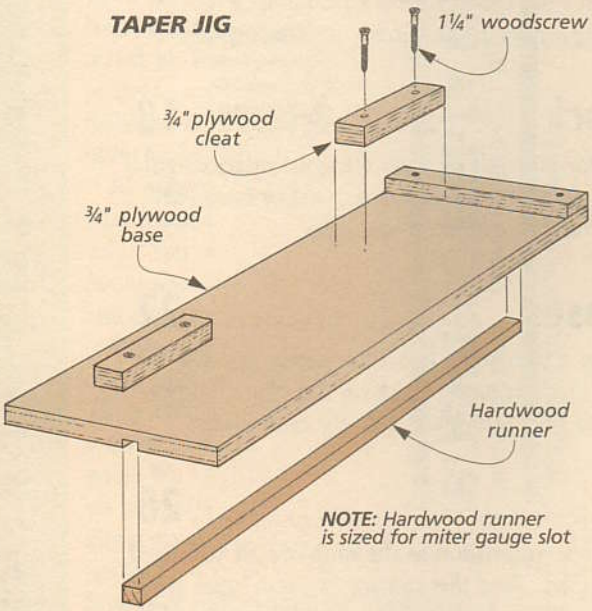

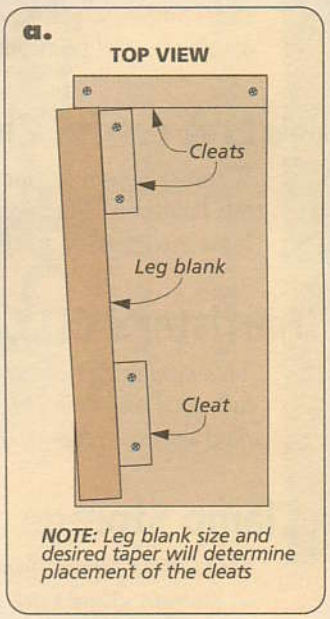

FREE Online Tips

If you'd like even more woodworking tips, the solution is simple. Just visit us at our web site and sign up to receive a free tip via email every week.

www.woodsmith.com

Saw Blade Cleaning

The cleaners that remove pitch and gum off of my saw blades give off a strong odor. Plus these cleaners tend to evaporate and dry out quickly when used in the open.

I recently bought a saw blade that came in a clear plastic sealable case, like the one shown at right. I now can clean a blade in the plastic case, and it helps prevent the chemicals from drying out and smelling up my shop.

John E. Heide
Jacksonville, Florida

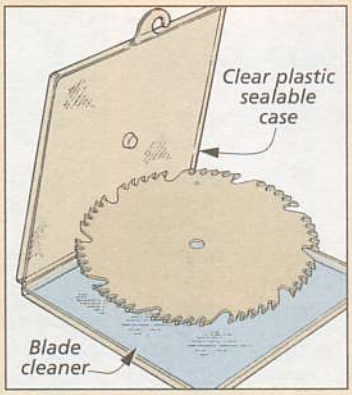

Hack Saw Knife

Finding a new use for an old tool has always been a challenge for me. I often use marking knives in my shop. And I found that an old hacksaw blade works great for making an inexpensive knife.

Place about 4" of an old blade in a metal vise at an angle. Then carefully bend it back and forth to break the blade. To complete the knife, just grind and sharpen the blade end, as shown below.

Roy Smith
Kent, Ohio

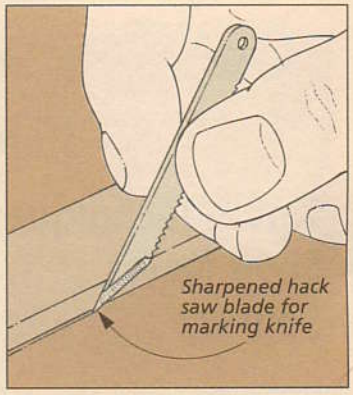

Hole Saw Unplugged

I use a hole saw to cut out small wooden wheels for toys. But trying to remove the pieces left inside a hole saw was sometimes difficult, if not impossible to do.

Then I realized that only one side of the wheel would show in the final project. So now, to get the wood piece out, I drive two small woodscrews in about 1/4" to make handles (see photo). Then simply give the head a twist and the wheel will pop right out of the saw body.

I now spend less time and frustration trying to get those plugs out of the hole saw and more time drilling them.

Jim Kuether
Troutdale, Oregon

Reinforcing Sandpaper

When using fine sandpaper, like 220 to 400 grit, the paper is thin and has a tendency to rip easily. It happens most often with my finish sander.

My solution was the handyman's special: duct tape. As you can see in the drawing at right, I placed two strips across the back of the sandpaper before putting it on my finish sander. This provides a backing that prevents the sandpaper from tearing.

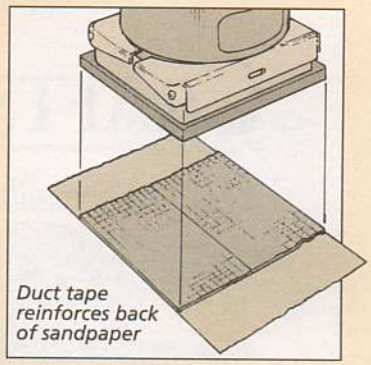

Because quality sandpaper can be expensive, a roll of duct tape can go a long way in saving money.

Richard L. Smith
Seiling, Oklahoma

Wax Holder

It seems like every time I needed the scribe from my combination square, it was gone. It had fallen out and was somewhere in my shop. And finding it in the sawdust was a gamble at best. After replacing it several times, I decided to come up with a new solution.

To prevent the scribe from falling out again, I put a small ball of beeswax in the hole in the square. When the scribe is pushed back into the hole, the wax provides a snug fit by filling the void.

Paul Kruse
Titusville, Florida

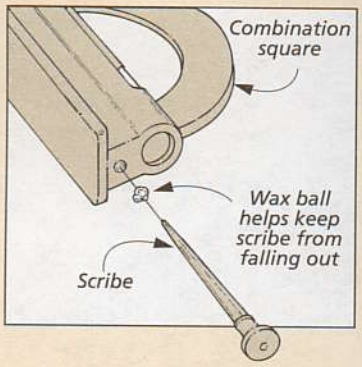

PVC Storage

Most hollow mortise chisels don't have a protective case to keep them in.

To prevent the delicate corners of the bits from getting nicked inside my tool chest, I came up with some inexpensive holders. Using some leftover PVC pipe in my shop, I cut several to length and added some caps to the ends.

Gary Steglich
Barron, Wisconsin

QUICK TIPS

SHELF PIN GUIDE

When it comes to locating and drilling a series of holes for adjustable shelving, I have tried everything from pegboard to pre-made jigs. But I've found that an inexpensive aluminum ruler works best. All you have to do is drill the holes in the ruler with the spacing you want and then use the ruler as a guide for the drill bit.

Jeff Swecker
Bruceton, West Virginia

TSP/90 AS CLEANER

When cleaning blades and bits, I don't want to smell up my shop. I use a phosphate-free *TSP/90* by *Red Devil*.

I buy it at the local hardware store. Mix a small amount in a pail with some warm water. After soaking for about 30 seconds, the pitch and gum wipes right off. As with many chemicals, gloves are needed.

Karl Riley
Via the Internet

SUBMIT YOUR TIPS

If you have an original shop tip, we would like to hear from you and consider publishing your tip in one or more of our publications. Just write down your tip and mail it to: *Woodsmith*, Tips and Techniques, 2200 Grand Avenue, Des Moines, Iowa 50312. Please include your name, address, and daytime phone number in case we have any questions. If you would like, FAX it to us at 515-282-6741 or send us an email message at: woodsmith@woodsmith.com. We will pay up to $200 if we publish your tip.

CRAFTSMAN-STYLE CABINET

This project will challenge you to pull together a variety of basic cabinet-making skills — assembling a case, fitting a door, and building drawers.

What is it about this cabinet that you notice first? The door with its two center stiles? The four drawers with their hammered ring pulls? Or possibly the straight, even grain of the oak case? For a relatively small project, there's a lot of details to "take in."

And there's a lot of woodworking here too. The case is plywood construction. The solid wood base it sits on is an open mortise and tenon assembly with a mitered frame. And the top is a large, glued-up panel. Add to this an inset door and four drawers, and you've got a wide variety of cabinet-making techniques — and challenges.

If all this sounds a bit overwhelming, keep in mind that all these techniques are pretty straightforward. Take the case, for instance. Fitting a lot of case panels together while you're adding glue and clamps can be a real juggling act. But that won't be a problem here. When it's time to assemble the project, all you have to do is work from the inside out, adding a piece or two at a time. And the relatively small size of the case also helps keep the assembly from being unmanageable. So you won't need an extra set of hands to build this project.

Or how about the drawers. They're built with a half-blind dovetail router jig and are mounted in the case on full-extension metal slides. These slides work great (especially when the drawer is stuffed full), and they're fairly easy to install. Still, by the time all four drawers were in place, I had a pretty good list of installation tips, and the five best are included on page 13.

Construction Details

OVERALL DIMENSIONS:
38"W x 20"D x 35½"H

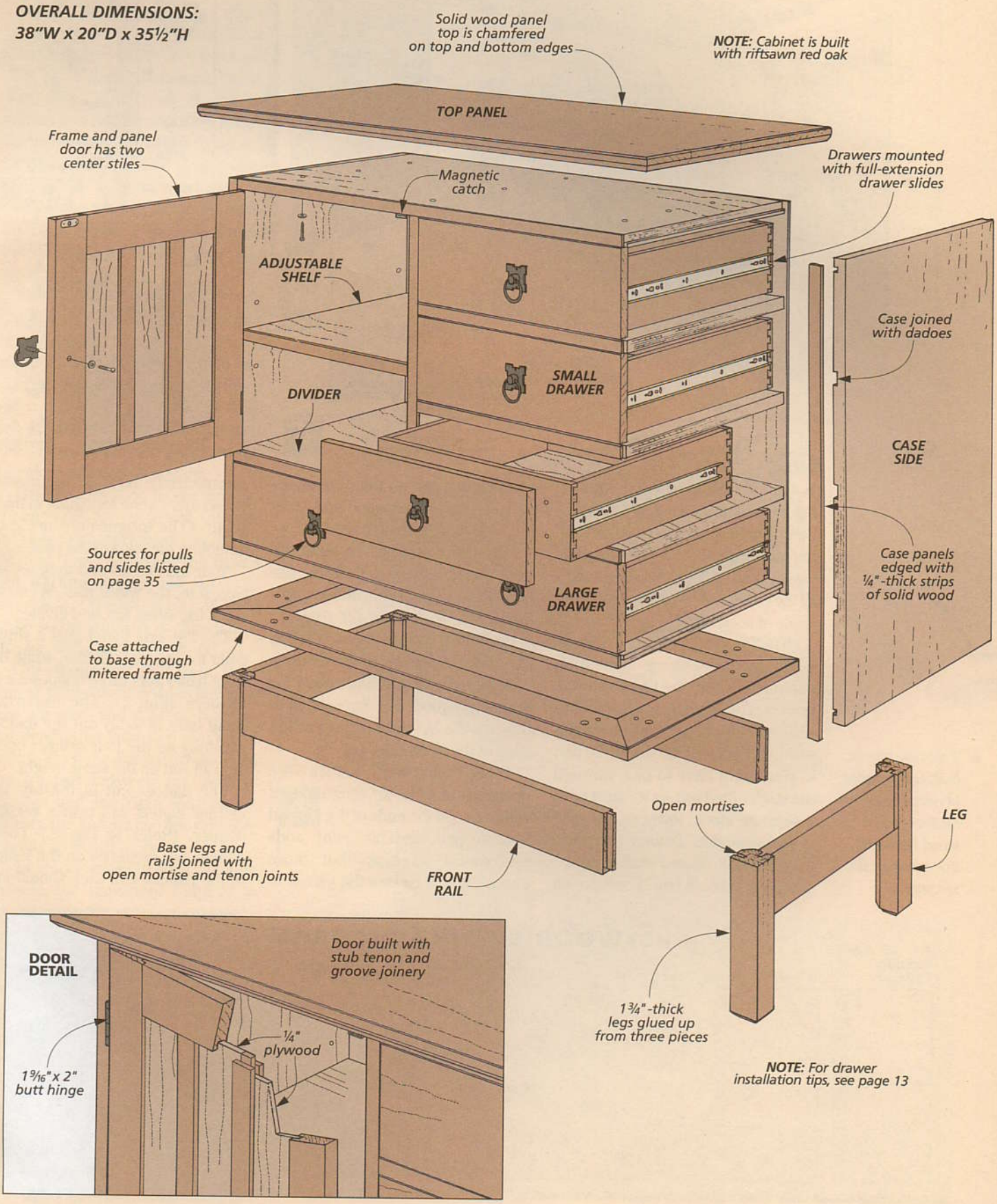

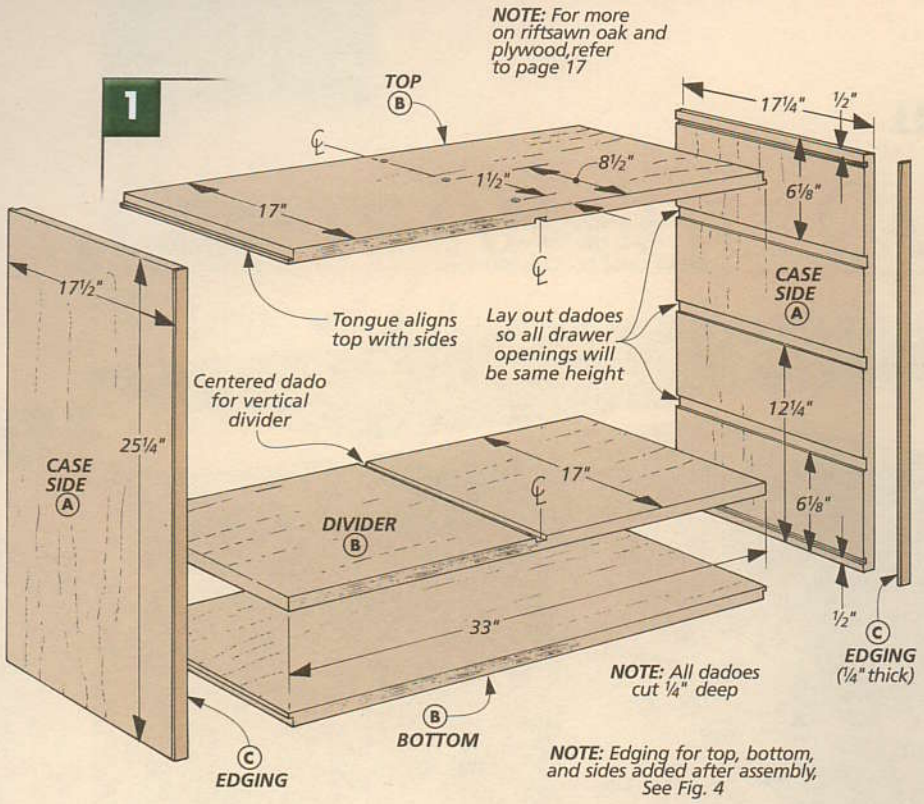

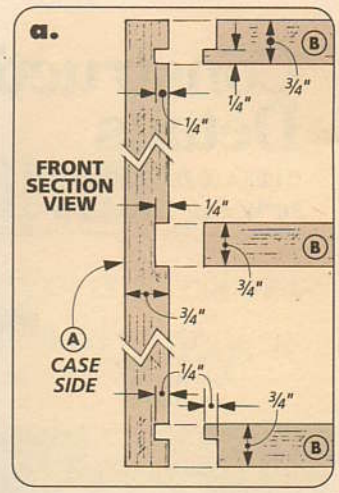

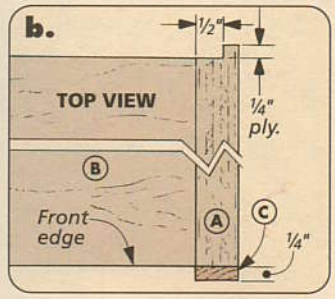

Case

To build this Craftsman-style cabinet, I started with the case. The joinery here is typical of case construction: the plywood panels are put together mostly with dadoes. And eventually, all the edges will be covered with thin strips of solid wood.

RIFTSAWN RED OAK. But I should begin by mentioning something about the wood used to build this project. The straight, even grain is a characteristic of oak that's been riftsawn (not plain or flatsawn). To find it, you might have to pick through the stack of red oak, or it might be in a separate stack. Riftsawn plywood is also available, although the core may be MDF instead of the regular plies, see photo at left. (For more on riftsawn oak and on the differences between regular plywood and MDF-core plywood, refer to page 17.)

CASE SIDES & DIVIDERS. To build the case, the first thing to do is cut the two *sides (A)* and *top, bottom,* and *divider (B)* to finished size (Fig. 1).

CUT DADOES. As I mentioned earlier, the case is joined with ¼"-deep dadoes, most of which are sized for the ¾" plywood. The exceptions to this are the ¼"-wide dadoes at the ends of the sides (Fig. 1a).

These narrower dadoes are designed to hold ¼" tongues that will be cut on the ends of the top and bottom panels. This joint adds mechanical strength, but more importantly, it causes the panels to automatically align during assembly, so there's one less thing to think about. (The tongues are made by rabbeting the ends of the panels.)

After the dadoes and tongues are complete, the wider dadoes can be cut in the sides, top, and divider.

The left side panel gets a single dado for the long divider, while the right panel gets three dadoes for its dividers (Fig. 1). The important thing here is to lay out the dadoes carefully so the four drawer openings all end up the same height.

The dadoes cut in the top and divider panels will trap a vertical divider. (Refer to Fig. 2.) These dadoes are centered on the length of the panels, and they should line

▲ *This case can be built with regular plywood (top) or MDF-core plywood (bottom). For more on this, see page 17.*

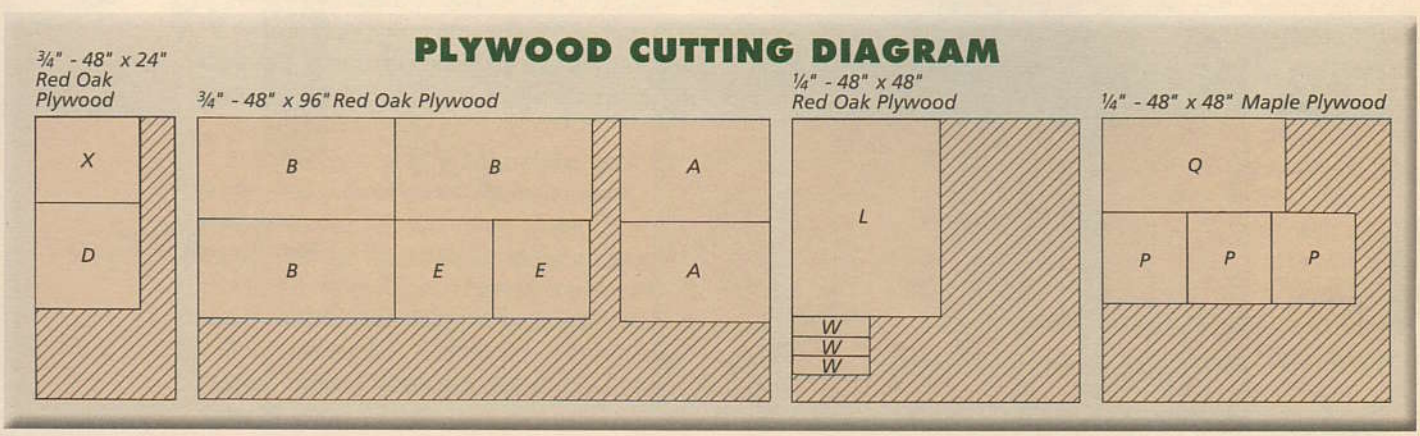

up across from each other so the door and drawer openings in the case will end up square.

EDGING. Before going on, I glued 1/4"-thick solid wood *edging (C)* to the front edges of the case sides and then hand planed and sanded them flush (Fig. 1b). This way, the edging will act as a stop for the other panels during assembly. (More edging will be glued to the other pieces after the case has been put together.)

With the edging glued in place, the back edges of the side panels can be rabbeted to hold a 1/4" plywood back (Fig. 1b).

VERTICAL DIVIDER. Now you're ready to dry assemble the case pieces and cut the *vertical divider (D)* shown in Fig. 2. This divider will hold two horizontal drawer dividers, so there are a couple of dadoes to cut (Fig. 2a). Just be sure that they align with the dadoes in the side panels so the openings will end up square.

ASSEMBLY. As soon as the *drawer dividers (E)* are cut to size, the case is ready to be assembled (Fig. 3). To do this, I worked from the inside out, starting with the case set on its *front* face. (The assembly will need to be set upright later so that clamps can be added across the front).

One thing that will help is to screw the vertical divider between the top panel and the long horizontal divider, as indicated in Figs. 1 and 2. Then the drawer dividers can be trapped between the vertical divider and the right side panel. Finally, the bottom and left side panels can be added to the assembly.

As you're working with the side panels, the important thing is to make sure the connecting pieces are all tight against the edging in front. This should automatically line up the back of the pieces with the rabbets in the side panels (Fig. 3a).

EDGING. When the glue is dry, all that's left is to cover the exposed plywood with more 1/4"-thick edging (Fig. 4). Clamping this edging is no trouble since the back panel isn't in place yet. However, trimming the edging flush with the plywood did require a couple different solutions. For more on this, refer to page 17.

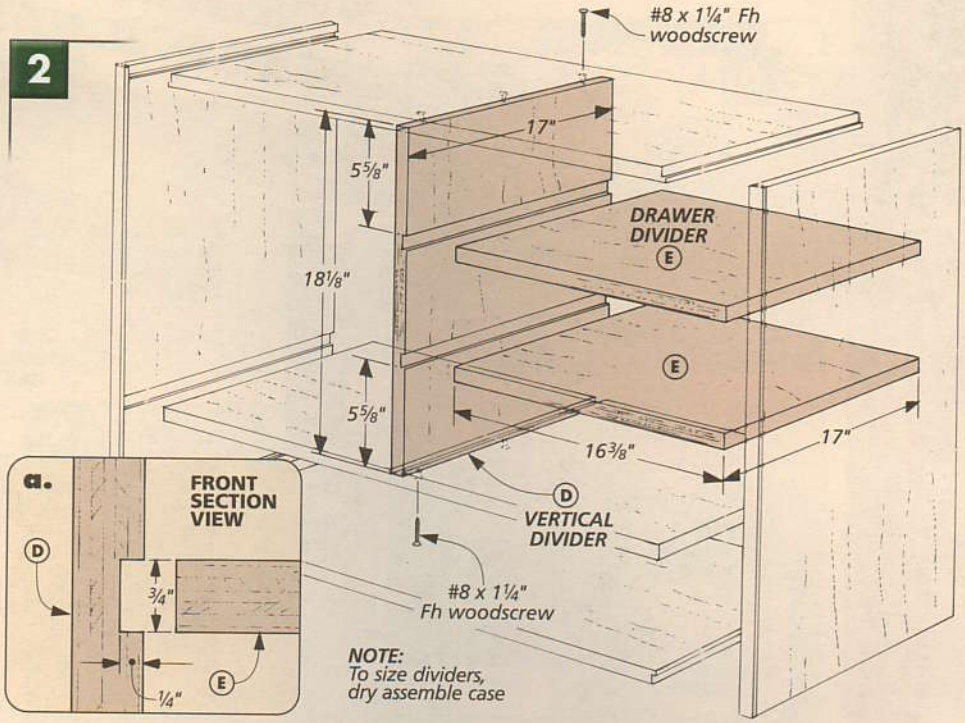

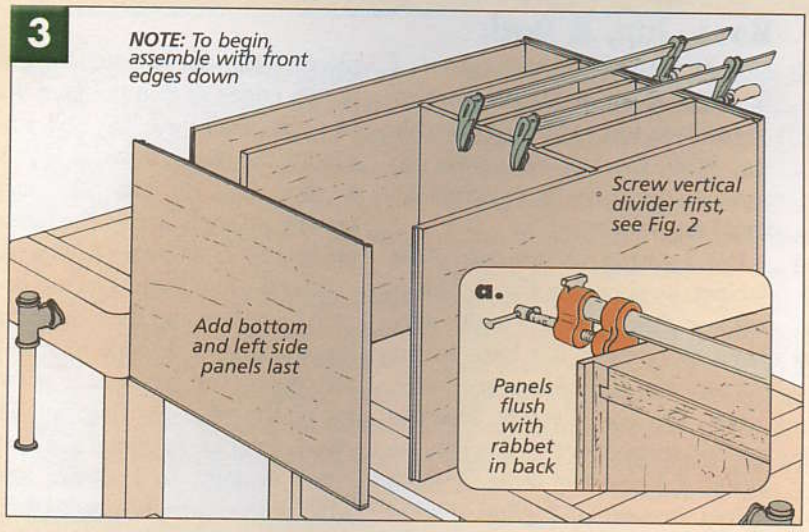

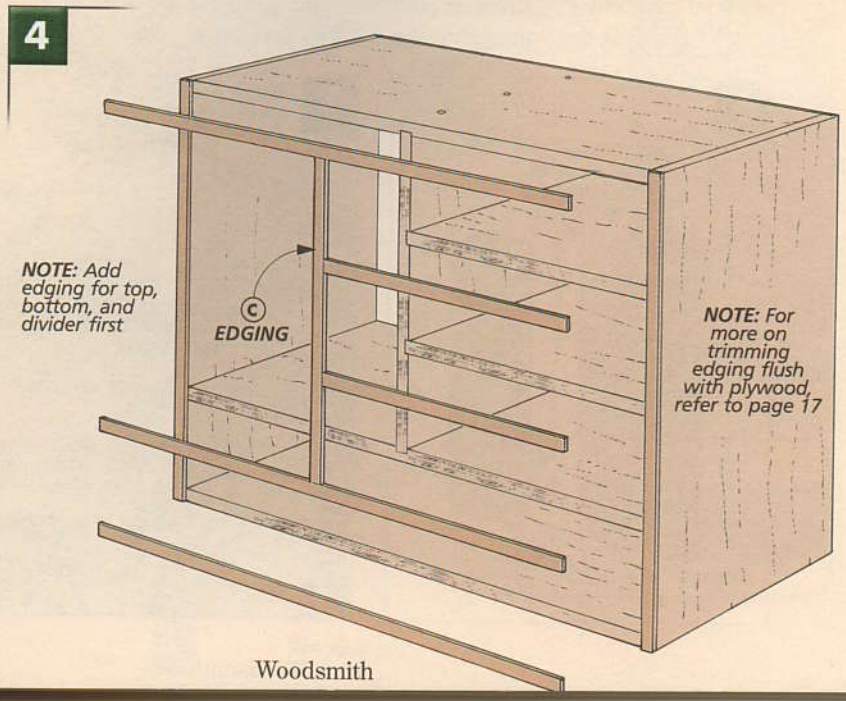

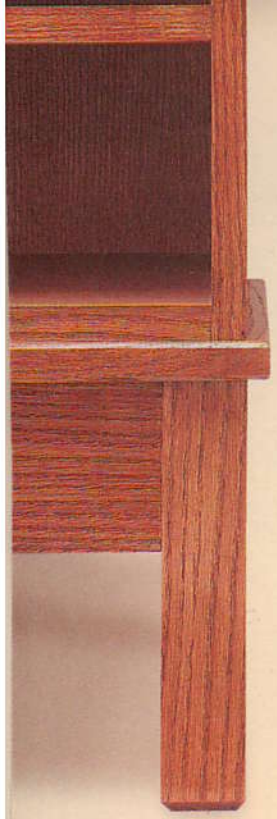

▲ *The solid wood base is connected to the plywood case through a mitered frame, as shown in Fig. 5.*

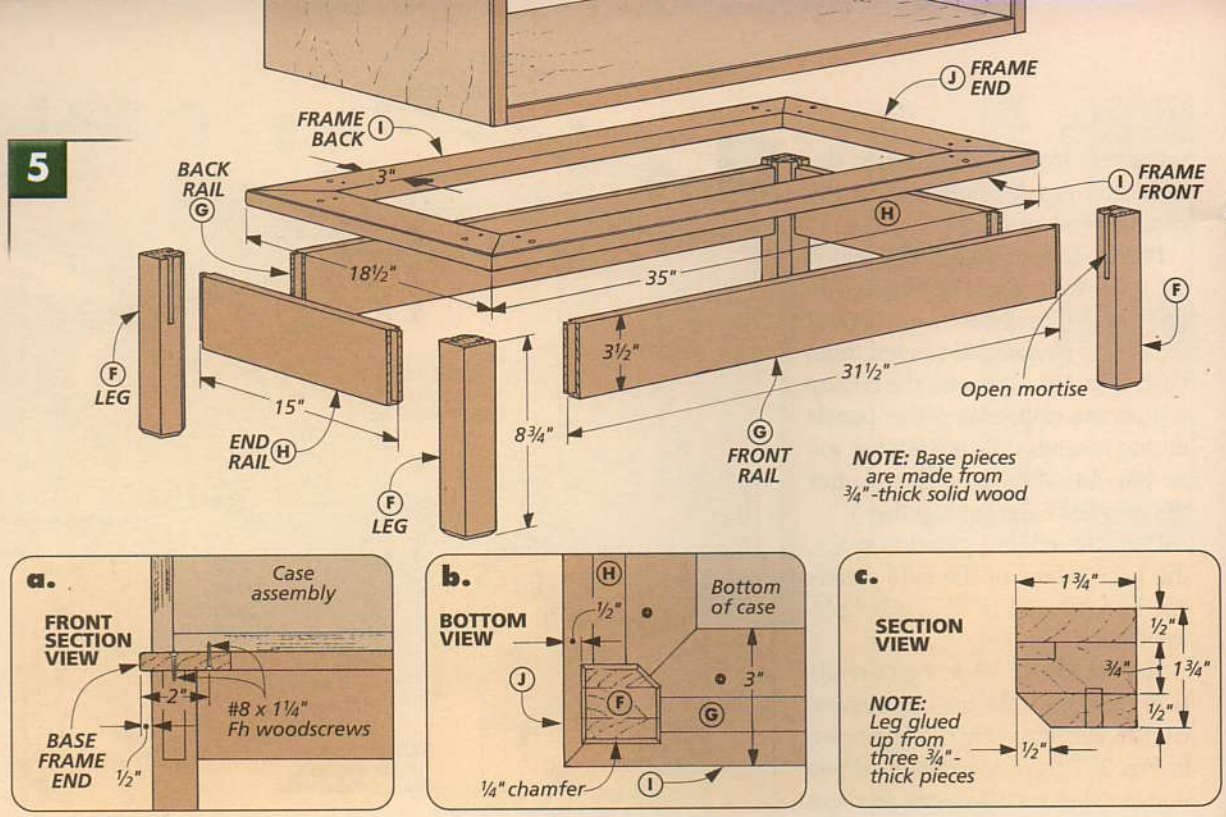

Base, Top, & Back

Now that the case is complete, I "changed gears" and began working on the base, top, and back of the cabinet. While the case was mostly plywood, all the pieces here (except the back) are solid wood.

BASE. I started with the base of the cabinet, as shown in Fig. 5. This is just four short legs joined with rails. Then to connect the base to the case, there's a simple mitered frame.

LEGS. The *legs (F)* of the base end up 1¾" square. But as you can see in Fig. 6, I glued up three ¾"-thick pieces instead of buying thicker material for these short pieces. And by taking a little time arranging the pieces, I was able to match the grain on the edges so that the joint lines were practically invisible. Still, when planing the blanks down to 1¾", it's a good idea to take the same amount off each face so the outside pieces end up the same thickness.

After the four leg blanks had been glued together and then cut to final length (8¾"), I decided to start by chamfering the inside edge of each leg on the table saw (Fig. 5c). This step helped me keep the pieces oriented visually, so I always knew which corner was the inside one.

The base pieces will be joined with open mortises and tenons, and I generally like to cut open mortises on the router table. These are deep enough (9/16") that you'll want to rout each mortise in two passes. And since the mortises are *not* centered on the legs, you'll have to adjust the router fence before you cut the second mortise on each piece (Fig. 7b). Note: Since the mortises aren't centered, the four legs aren't actually "identical," so it's a good idea to lay out the mortises carefully.

To complete the legs, the last thing to do is rout a small chamfer along the bottom end (Fig. 6). Here, you'll want to be sure to use a backer board to prevent chipout.

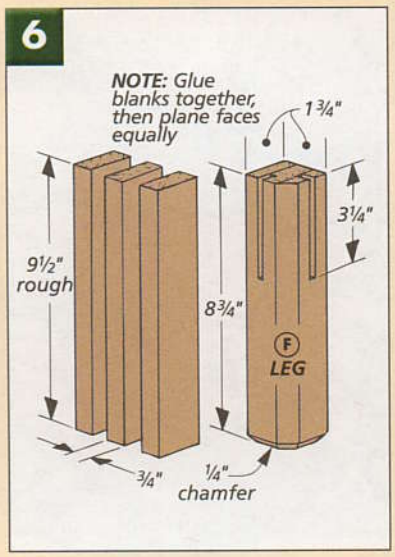

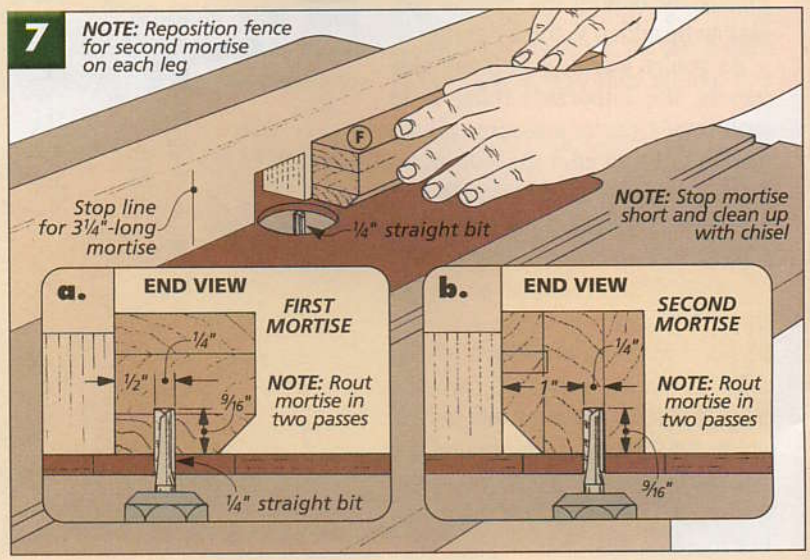

RAILS. With the legs complete, it's time to add the 3/4"-thick pieces that connect them. I sized the *front (G)*, *back (G)*, and *end rails (H)* so the assembled base would match the size of the case. Then I cut tenons on the ends to fit the mortises in the legs, as shown in Fig. 8. (Because the mortises are open, you won't need to cut a shoulder on the top, just the bottom, as in Fig. 8b.)

When you're satisfied with the fit of the tenons, the base pieces can be assembled. With the open mortises and tenons, be sure to keep an eye on the top edges of the pieces to make sure they end up flush.

FRAME. To make it easy to connect the base and case, I added a 3/4"-thick frame (Fig. 5). The *front (I)*, *back (I)*, and *ends (J)* are sized so the frame will overhang the legs 1/2" on each side. But the final length isn't as important as making sure the long and short pieces end up the same length. And instead of using a stop block to do this, I simply carpet taped the pieces together when mitering them, as shown in Fig. 9.

Before gluing up the frame, you can rout a 1/16" chamfer on the top and bottom outside edges and also drill the two sets of countersunk shank holes for screwing the frame to the base and the case (Fig. 9a). Then after gluing the frame together, it can be screwed to the base, and the base can be screwed to the case.

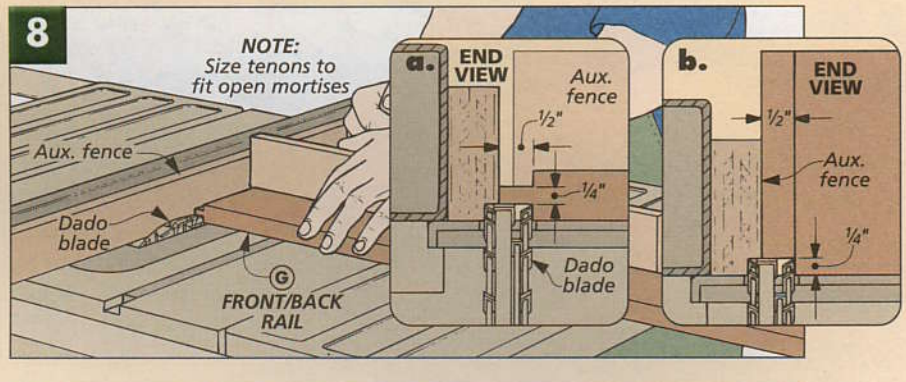

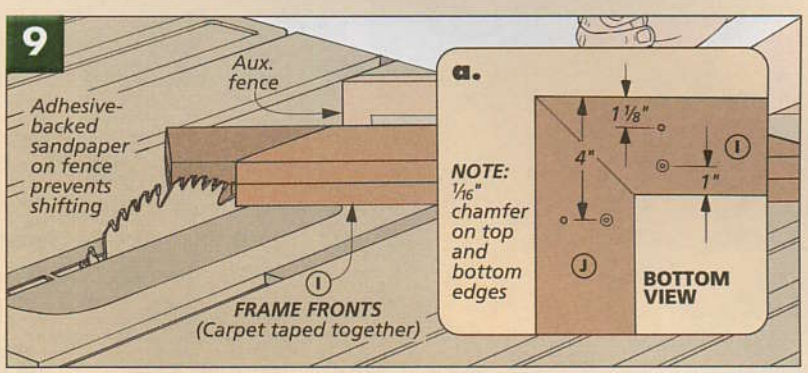

TOP. With the base complete, I worked on the 3/4"-thick *top panel (K)* of the case next, as shown in Fig. 10. I sized the panel to overhang the front and sides 2" but only 1/2" in back (Fig. 10a).

After the top panel has been planed smooth, its top and bottom edges can be chamfered (Fig. 10b). This time, I routed a slightly larger chamfer (1/4") around the bottom edge. (The top chamfer is just 1/16".)

When attaching the top to the case, the solid wood panel needs to be able to expand and contract. (The plywood case isn't going to.) So I drilled oversized shank holes (3/16") in the case top and used roundhead screws and washers to screw the solid wood top in place (Fig. 10).

BACK. The last piece to add to the case is the easiest. It's just a 1/4" plywood *back panel (L)* that's cut to fit the opening in back and is then nailed in place with brads (Fig. 10).

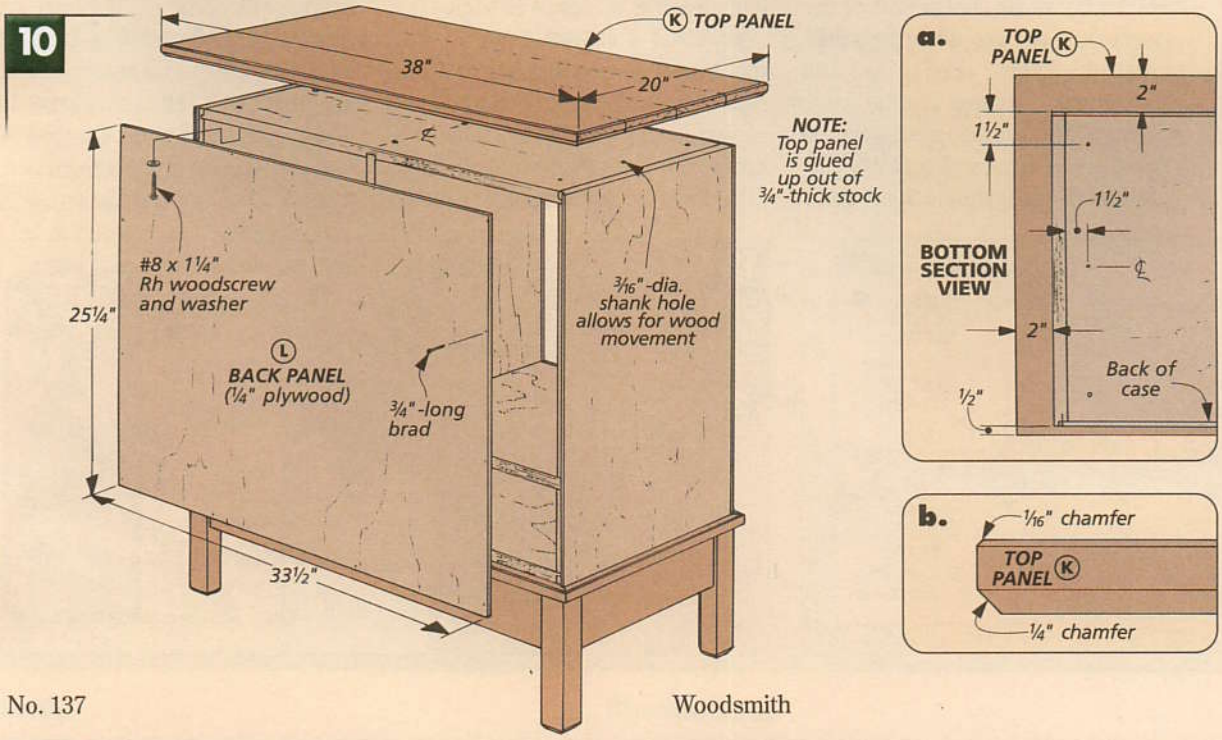

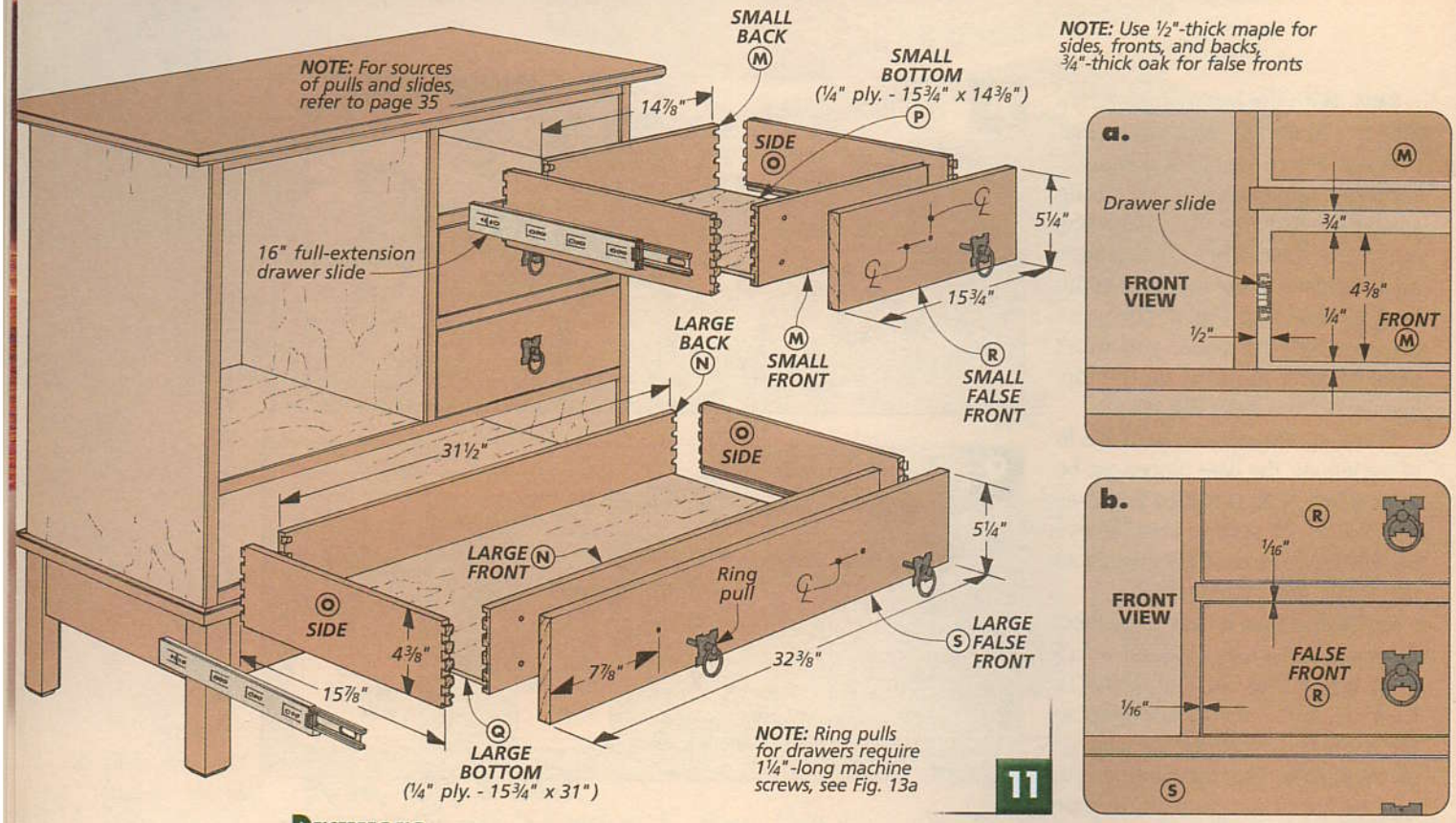

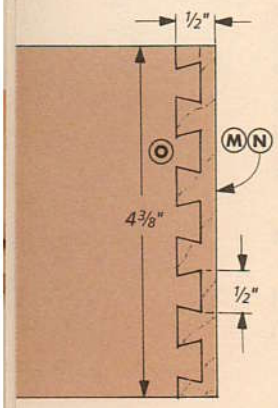

DRAWER DETAIL

Drawers

Like the rest of this project, the drawers are made much like those you would see on other cabinets. They're built using a half-blind dovetail router jig and are mounted on full-extension drawer slides, which are hidden by a simple false front. Note: Sources for the hardware are listed on page 35.

CUT TO SIZE. The first thing to do is cut all the drawer pieces to size from ½"-thick maple, as in Fig. 11. Since there's a false front here, there's no need to try to fill the height of the openings — you can allow for a little "breathing room" (Fig. 11a). And since all the openings are the same height, all the drawer pieces can be ripped to the same width (4⅜").

As for the lengths of the drawer pieces, the *small front* and *back (M)* and the *large front* and *back (N)* are easy to size. Simply measure the width of the openings and subtract 1" for the metal slides (½" on each side). Figuring the length of the *sides (O)* requires a bit more math because you need to allow for the false front and the dovetail joint. But again, the drawers don't have to match the depth of the cabinet exactly. (I made the sides 15⅞" long, leaving ¼" space in back.)

DOVETAILS & BOTTOM GROOVE. With the drawer pieces in hand, you can rout the half-blind dovetails, as shown in the left margin. Then the groove for the ¼" plywood *bottoms (P, Q)* can be cut (Fig. 12). I like to center the groove on the first pin on the drawer sides so it won't be visible after the drawer is assembled.

INSTALLATION. After the drawers have been glued together, they can be mounted on the metal slides. This isn't too difficult, and the installation tips on the next page should make the job even easier.

FALSE FRONT. Finally the ¾"-thick *false fronts (R, S)* can be added, as in Fig. 13. Here's where any custom fitting will come in. I sized each piece to allow for a 1/16" gap on each side (Fig. 11b). To attach them to the drawers, I relied on carpet tape and a couple of pennies. (See bottom right tip on next page.) Then all that's left is to mount the pulls.

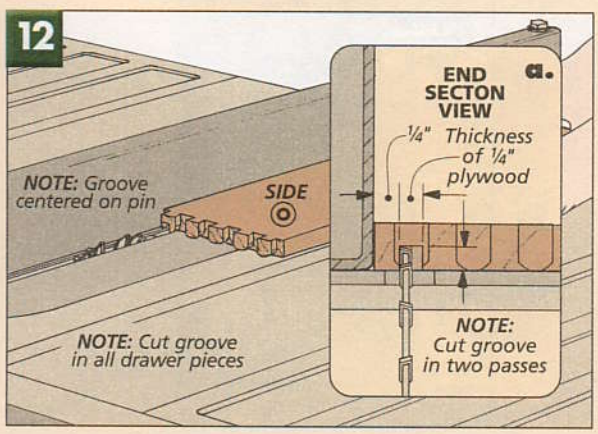

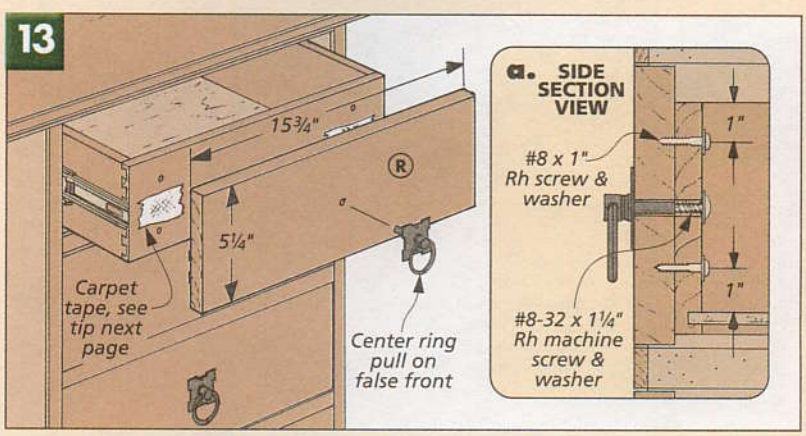

5 Drawer Installation Tips

Building a drawer is only half the battle — you also have to install it so it opens and closes smoothly. Whenever possible, I like to use metal slides. The reason is simple: they work well whether the drawer is completely empty or packed full.

Of course, the drawer slides have to be installed properly. And in theory, this is pretty straightforward. The reality is that case openings are not always perfectly square. And getting the two halves of each slide perfectly parallel isn't quite automatic. But here are five quick tips you can use to make the process (and the slides) as smooth as possible.

1. Flatten the Bottom

When installing slides, I measure from the bottom edge. So I make sure the bottom is flat using adhesive-backed sandpaper on the table saw.

2. Adjustment Slots

Many mounting slides have both holes and slots to screw through (Fig. 1). For the drawer half of the slide, I use the vertical slots so the drawer can be shifted up or down if necessary.

Later, when I have the drawer opening smoothly, I add a screw to one of the holes so everything is locked in place.

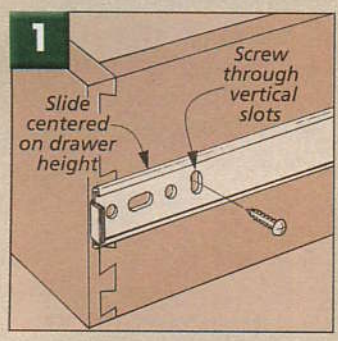

3. Slide Installation Jig

When installing a metal slide in a case, the slides need to be level with each other. And to do this, I make the jig shown below. It's just a scrap piece that the slide rests on as it's being screwed in place.

HEIGHT OF JIG. The important dimension with this jig is its height — the case half of the slide needs to align with the drawer half. But following a simple procedure makes this easy enough to figure out.

The first thing to do is mount the drawer half of the slide, as shown in Fig. 1 at left. (For this project, the slides are centered on the height of the drawers.) Next, the case half of the slide can be slid back onto the drawer half. Now finding the height of the jig is just a matter of measuring down to the bottom of the drawer and allowing for the gap *below* the drawer (1/4" in Fig. 11a on page 12).

CLEAT. Since these drawers have a 3/4"-thick false fronts, the slides need to be inset this distance into the cabinet, as shown in detail 'a' below. To help with this, I first screwed a short cleat to the front of the jig. Then I drew a mark 3/4" back from the joint line.

Now with the cleat against the front of the case, align the slide with the layout mark before screwing it in place.

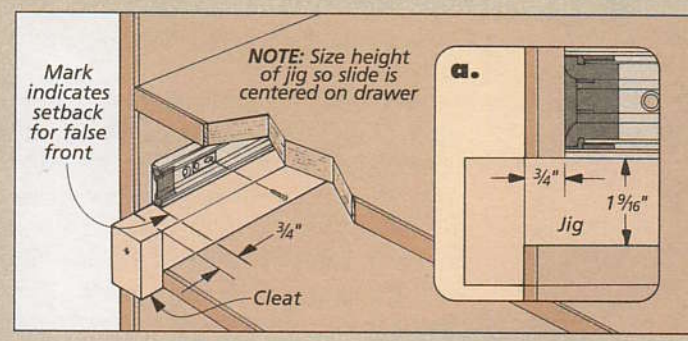

4. Fitting Inset Faces

When an inset drawer is shut, its face should be in the same plane as the face of the cabinet. If it's not flush, you can end up with a fairly obvious shoulder.

When a drawer needs to be planed or sanded flush, it's tempting to work on the false front. But there's a risk. You could round over its edges.

Instead, I sand or plane the actual front of the drawer *before* the false front is added. (Or I'll remove the false front.) And to help me see exactly where to plane the front piece (as well as to help check my progress), I use a metal rule as a straightedge, as shown in the drawing above. Simply set it across the opening in the case and pull the drawer out until it touches the rule.

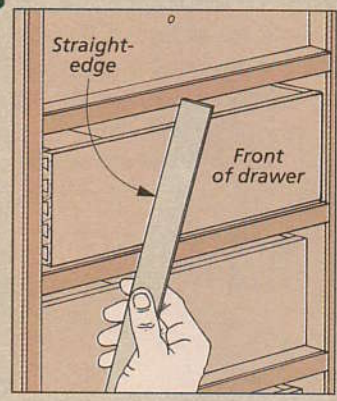

5. Attaching the False Front

Attaching a false front can be an "on again, off again" ordeal. With 1/16" gaps between this piece and the case opening, it has to be positioned perfectly to get the gaps even.

To mount the false front, I place a few strips of double-sided carpet tape on the front of the drawer. (See drawing.) Then to create the gap at the bottom, I set a few pennies in the case. After centering the false front side-to-side by eye, it can be tipped up and pressed against the drawer.

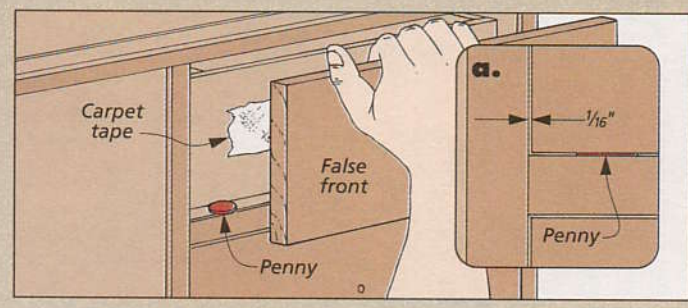

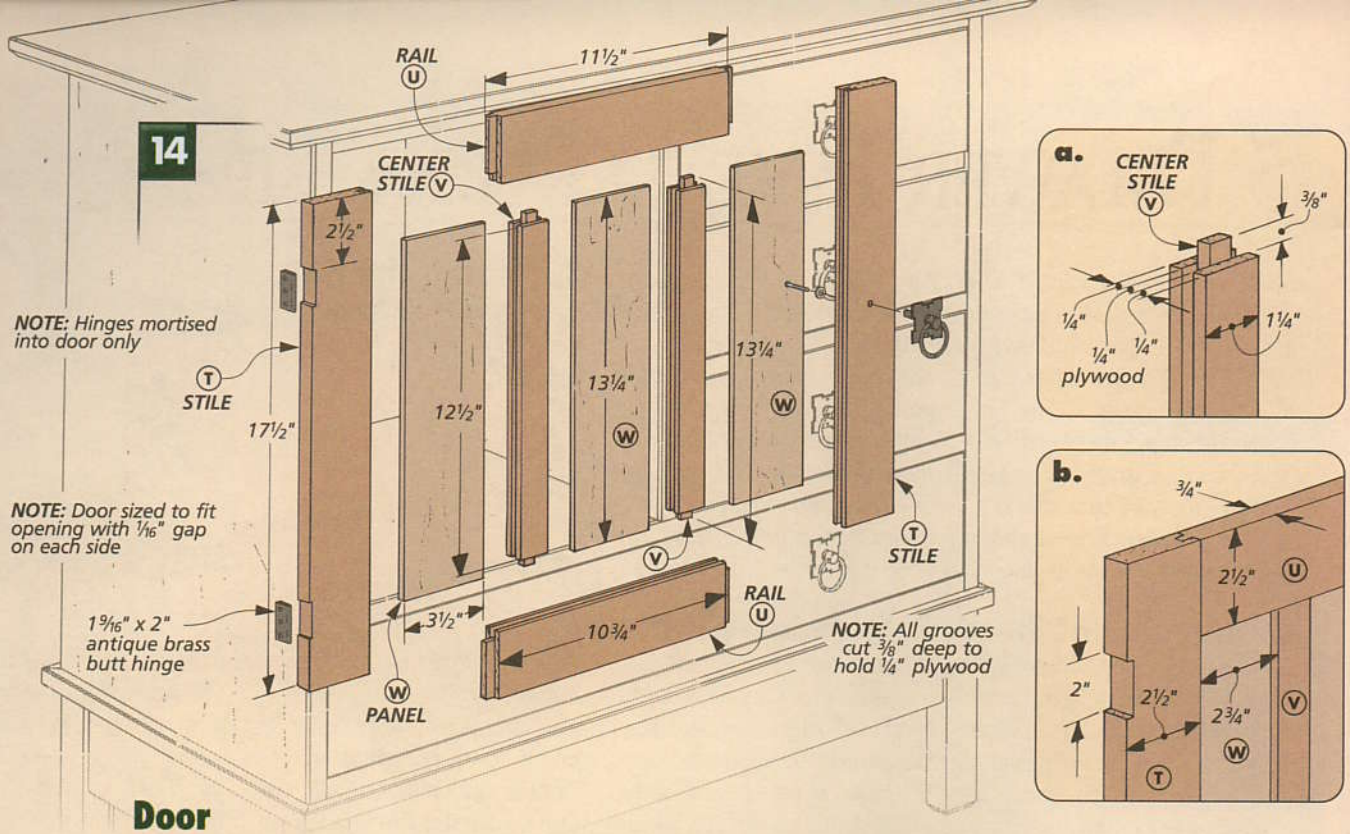

Door

With the drawers complete, all that's left is to make the small inset door. It's a frame and panel assembly joined with stub tenons and grooves — the only "twist" being a couple of center stiles that divide the panels, as shown in the photo at left.

CHECK CASE. Before building an inset door, I like to check the case opening first. If it's square, the ¾"-thick *stiles (T)*, *rails (U)*, and *center stiles (V)* can be cut to final size, as shown in Fig. 14. (I sized the door so the gaps around its edges would match those around the false drawer fronts — 1/16".) On the other hand, if the case isn't square, then I'll cut the pieces slightly oversized. This way, the door can be trimmed to match the shape of the opening so the gaps around it are consistent.

STUB TENON & GROOVE. To join the frame pieces, I chose stub tenon and groove joinery. You'll want to start by cutting one ⅜"-deep, centered groove on each piece, as shown in Fig. 15. The exceptions to this are the center stiles — they get a groove on both edges (Fig. 14a).

The method I like to use for cutting a centered groove *doesn't* involve a careful layout or a dado blade. Instead I simply use a regular blade that's roughly centered on the workpiece and make two passes, flipping the piece end-for-end between passes. (This process centers the groove automatically.)

After the first two passes, the groove will be too narrow. But all you have to do is nudge the rip fence toward the blade slightly and repeat the process until the groove holds a piece of ¼" plywood.

Cutting the stub tenons on the rails and center stiles is much the same as cutting the grooves (Fig. 16). Each tenon is cut in two passes, with the piece flipped over between passes. And you'll want to sneak up on the size of the tenon until it just fits the groove. (This time though, you'll be using a dado blade buried in an auxiliary fence.)

PANELS & ASSEMBLY. Now that the joinery for the frame is complete, you can cut the three identical *door panels (W)* that fit between the stiles, as shown in Fig. 14. Then after the door has been dry assembled and you're satisfied with the fit, the pieces can be glued together.

HANG DOOR. When mounting this inset door, I used common butt hinges (antique brass). The mortises for these hinges are cut just in the left door stile (not the case), and I sized them so there would be a 1/16" gap between the door and case

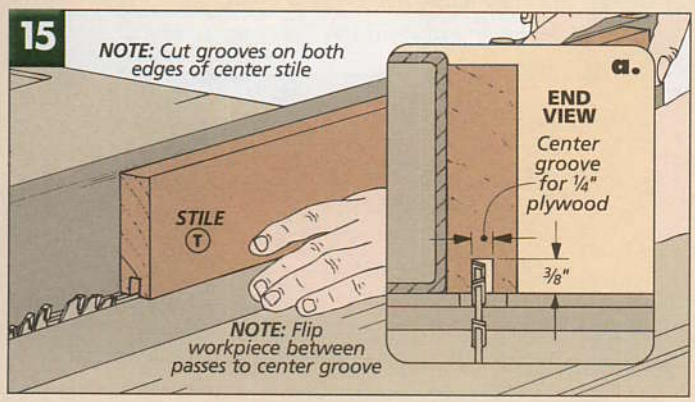

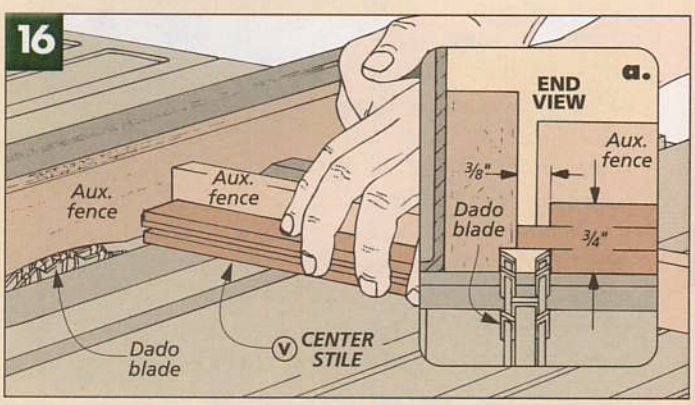

(Fig. 14b). An easy way to do this is at the table saw. Simply stand the door on edge (with the help of a tall auxiliary fence) and make repeated passes over a dado blade.

MOUNT HARDWARE. All that's left to complete the door now is to add the ring pull to the right stile (Fig. 14) and add a magnetic catch (and strike plate), as shown in Fig. 17.

SHELF. The last piece to add before finishing the cabinet is an *adjustable shelf (X)*, as shown in Fig. 17. This is just a 3/4" plywood panel with a 1/4" strip of edging (C) added to its front edge. To support this panel, you'll need to drill some 1/4"-deep holes inside the case and add some shelf pins (Fig. 17a).

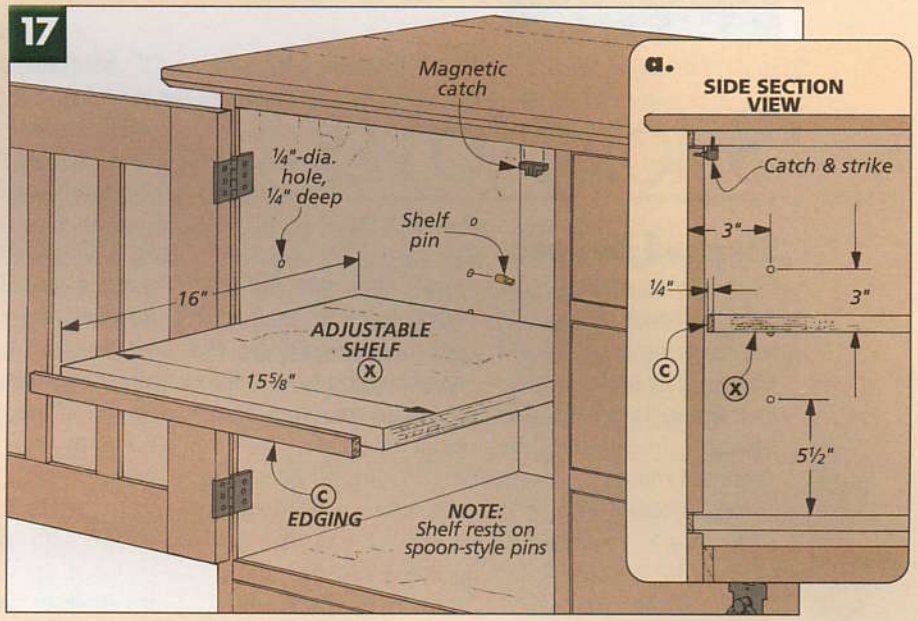

MATERIALS & SUPPLIES

A	Case Sides (2)	3/4 ply. - 17 1/4 x 25 1/4
B	Top/Btm./Divider (3)	3/4 ply. - 17 x 33
C	Edging	3/4 x 1/4 - 230 In. in.
D	Vertical Divider (1)	3/4 ply. - 17 x 18 1/8
E	Drawer Dividers (2)	3/4 ply. - 17 x 16 3/8
F	Legs (4)*	1 3/4 x 1 3/4 - 8 3/4
G	Front/Back Rails (2)	3/4 x 3 1/2 - 31 1/2
H	End Rails (2)	3/4 x 3 1/2 - 15
I	Frame Front/Back (2)	3/4 x 3 - 35
J	Frame Ends (2)	3/4 x 3 - 18 1/2
K	Top Panel (1)	3/4 x 20 - 38
L	Back Panel (1)	1/4 ply. - 33 1/2 x 25 1/4
M	Sm. Drawer Fr./Bk. (6)	1/2 x 4 3/8 - 14 7/8
N	Lg. Drawer Fr./Bk. (2)	1/2 x 4 3/8 - 31 1/2
O	Drawer Sides (8)	1/2 x 4 3/8 - 15 7/8
P	Sm. Bottoms (3)	1/4 ply. - 15 3/4 x 14 3/8
Q	Lg. Bottom (1)	1/4 ply. - 15 3/4 x 31
R	Sm. False Fronts (3)	3/4 x 5 1/4 - 15 3/4
S	Lg. False Front (1)	3/4 x 5 1/4 - 32 3/8
T	Door Stiles (2)	3/4 x 2 1/2 - 17 1/2
U	Door Rails (2)	3/4 x 2 1/2 - 11 1/2
V	Door Ctr. Stiles (2)	3/4 x 1 1/4 - 13 1/4
W	Door Panels (3)	1/4 ply. - 3 1/2 x 13 1/4
X	Adj. Shelf (1)	3/4 ply. - 16 x 15 5/8

- (22) #8 x 1 1/4" Fh Woodscrews
- (6) #8 x 1 1/4" Rh Woodscrews
- (28) #8 Washers
- (1 pkg.) #17 x 3/4" Brads
- (4 pr.) 16" Full-Extension Slides
- (6) Ring-Style Drawer Pulls
- (5) #8-32 x 1 1/4" Rh Machine Screws
- (16) #8 x 1" Rh Woodscrews
- (1 pr.) 1 9/16" x 2" Ant. Br. Butt Hinges
- (1) Magnetic Catch w/Strike Plate
- (4) 1/4" Spoon-Style Shelf Pins

* Each leg glued up from three 3/4"-thick blanks.

SOLID WOOD CUTTING DIAGRAM

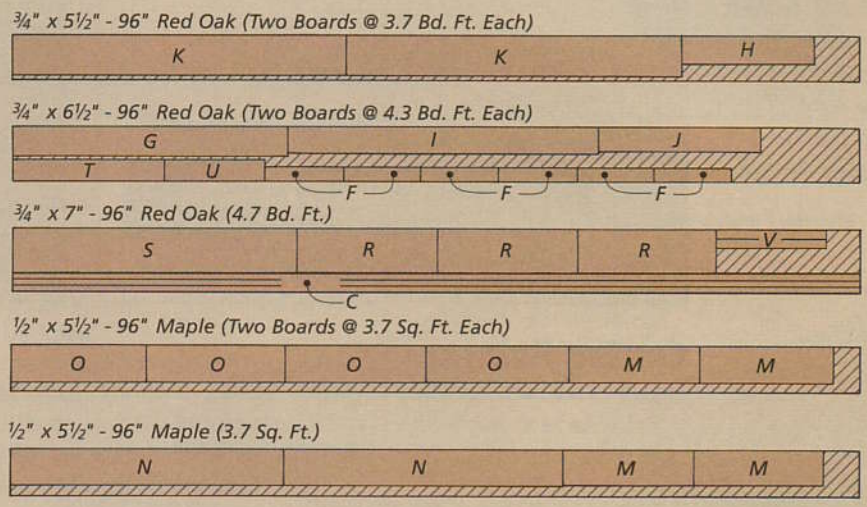

NOTE: Plywood cutting diagram shown on page 8. Sources for hardware listed on page 35.

FINISHING NOTES

Traditional Craftsman projects were often finished to a dark brown color by fuming the oak with ammonia. I didn't want a dark cabinet, and I wanted to avoid the potential danger of working with ammonia. But I did want to even out the color differences between the plywood and solid wood.

To find just the right color, I experimented with several different stain combinations on test pieces. The one I chose was a combination of two *General Finishes'* Seal-A-Cell stains. Simply mix one part "Special Walnut" and two parts "Golden Oak." (I sanded everything to 180 grit.)

What you use for the topcoat is less critical (though it's still a good idea to test it over the stain). I chose *Hope's* tung oil varnish, giving the entire project (inside and out) one coat. Then another three coats were applied to the outside surfaces. Between coats, I tried to sand as little as possible, using 320-grit (or higher) sandpaper. And go lightly around any corners — it doesn't take much to sand through the varnish *and* stain.

SHOP NOTES

Stopped Dadoes

▲ *Since the ends of the stopped dadoes need to be squared up anyway, they are cut a bit short of the mark. Then use a chisel to complete the dado.*

Each section of the barrister's CD cases on page 22 has three pairs of stopped dadoes. The easiest way to cut these is with a 1/4" straight bit in a table-mounted router.

Even though each pair of dadoes has a different length, the procedure for cutting them is the same. As you cut one dado, you'll be pushing the workpiece into the bit. To cut the second dado, you need to plunge the piece onto the spinning bit and push it through.

STOP LINE. For the first cut, you'll need to know where to stop the workpiece before the bit cuts through the back edge.

All you need to do is mark a stop line on the fence to the right of the bit, as shown in Fig. 1. I allow a bit of "fudge room." If the dado is supposed to stop 1/4" from the end, I'll mark the line 3/8" from the bit. Since the end of the dado needs to be squared up with a chisel, it's easy to complete the length of the dado as you do that, like you see in the margin photo at left.

START LINE. For the other dado in the pair, you'll need to make a start line on the left side of the bit, like you see in Fig. 2.

Since each pair of dadoes stops a different distance from the edge, each pair will need new start and stop lines. W

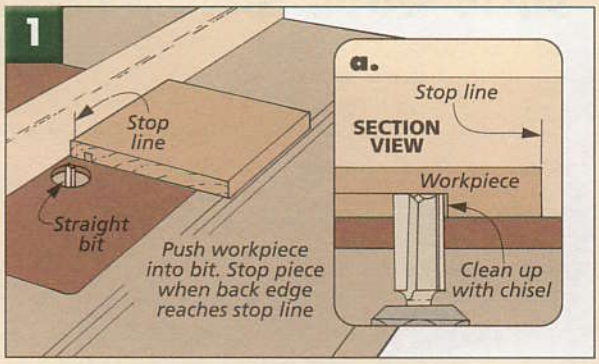

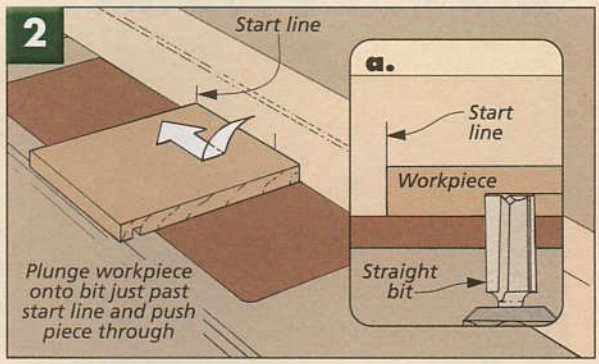

Cutting Half Laps

Usually, I cut half laps with a dado blade in the table saw. But that can leave score marks. Those marks could be sanded out on a larger piece (or would go unnoticed), but not on the doors of the barrister's CD cases. So I decided to cut the joint with a straight bit in the router table to get a smoother surface.

SETUP. Before working on the door pieces, I cut a test joint on some scrap the same thickness as the door pieces. All you need to do is raise the bit 1/4" above the table. Then make a pass on one end of each scrap, as shown in Fig. 1. Check the setup by fitting the pieces together like you see in Fig. 1a. If the faces are flush, the bit is at the right height.

CUTTING JOINT. Using a 1/2" straight bit, I took three passes to cut the 1" width of each joint. Take a look at Fig. 2 and you can see that the first pass defined the shoulder of the joint. The second pass is a light cut with the end of the workpiece pressed against the router table fence. This cut helps prevent chipout as you clean up the remaining waste.

As you make each pass, press firmly on the piece so the cuts are all the same depth. Even so, there may be a slight ridge between the passes. A light sanding will take care of this. W

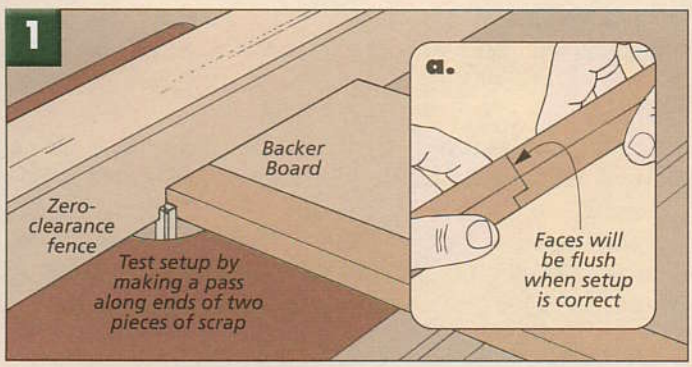

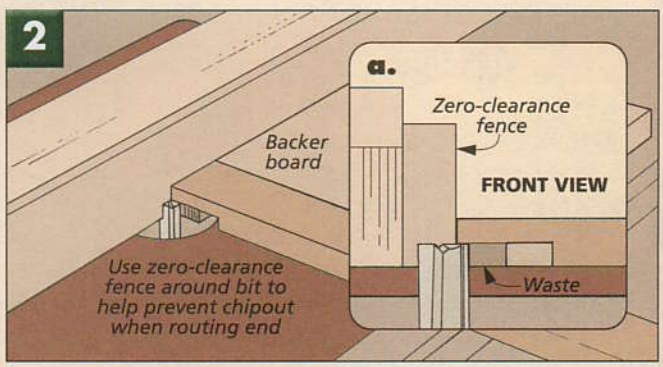

Trimming Plywood Edging

Using plywood makes building a carcase much quicker. One drawback, though, is that you need to cover the exposed plywood edges. This is simple to do with solid wood edging strips cut a bit over width.

For the Craftsman-style cabinet on page 6, the edging on the sides is trimmed flush before the case is assembled. The edging that's applied later can be trimmed using a flush trim bit in the router.

It's next to impossible to balance a router on the edges of the carcase. So to provide a wider surface for the router to ride on, I used a couple of methods.

DOOR OPENING. For the edging along the top of the door opening, I cut a rabbet in a 2x4 and clamped it to the cabinet, like you see in Fig. 1. Just make sure the edge of the 2x4 is perfectly flush with the top of the edging (Fig. 1a) so you don't end up routing a beveled edge.

DRAWER OPENINGS. I came up with a simpler way to trim the drawer openings and the side and bottom of the door opening. I just spanned them with an auxiliary router base made of 1/4" hardboard, as shown in Fig. 2.

After routing, the corners will still need to be squared up. A sharp chisel with the bevel against the edging makes quick work of this (Fig. 2a).

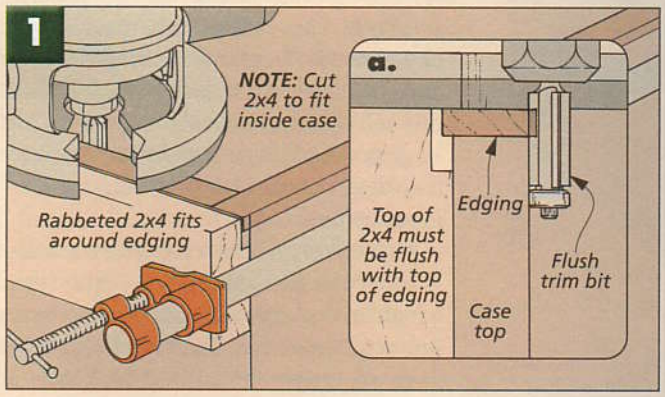

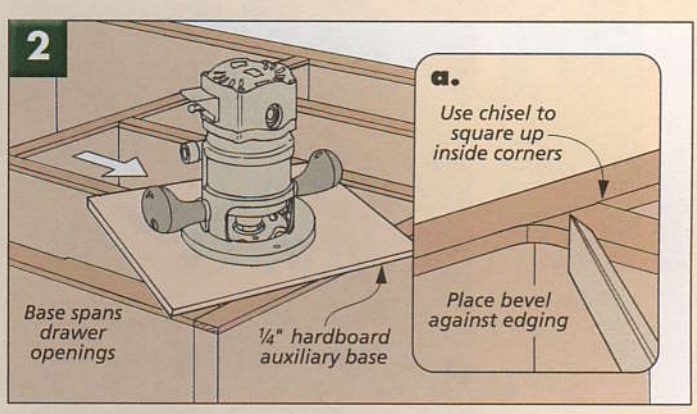

Riftsawn and Plainsawn

The straight grain of the lumber used for the cabinet on page 6 is a result of using riftsawn materials.

The difference between riftsawn and plainsawn (also called "flatsawn") grain has to do with how the board is cut from the log. Growth rings on the ends of plainsawn lumber are at 30° or less (or "flat") to the face of the board (Fig. 1). The result is a peaked or "cathedral" grain on the face.

If you look at Fig. 2, you'll see that riftsawn lumber has the growth rings oriented closer to vertical (between 30° and 60° to the face of the board). This gives the grain on the face of this board a more consistent, straight appearance.

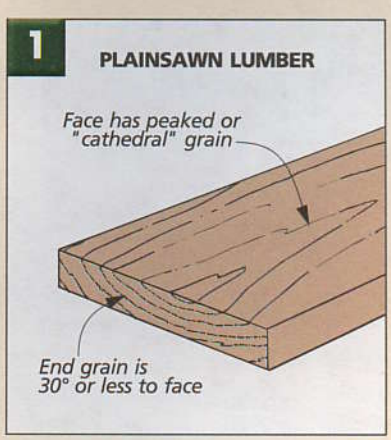

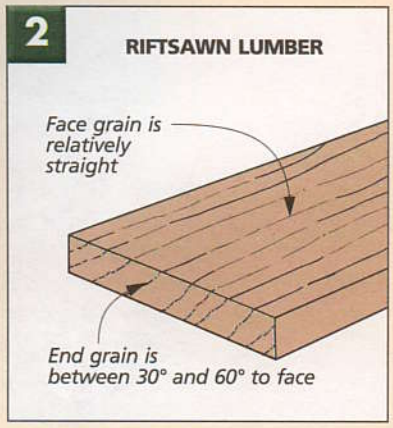

Veneer-Core and MDF-Core Plywood

When you look for riftsawn sheet goods you may find it with a core of medium density fiberboard (MDF) or a more typical veneer core. Either one works fine for the cabinet on page 6. The two types should be priced about the same, but there are some key differences between them.

MDF CORE. An MDF-core plywood, shown in the top photo at right, really isn't plywood. The MDF core makes the sheet very stable, consistently flat, and a uniform thickness.

It's also much heavier than regular plywood. So even a smaller project like the cabinet will end up being pretty weighty.

One more thing. MDF won't hold screws as well as regular plywood. So to get the best possible grip, drill pilot holes and use a screw with deeper threads that run all the way up the shank, such as a sheet metal screw.

VENEER CORE. Like the name says, the center of veneer-core plywood is several layers of veneer, as you can see in the lower photo at right. This type of plywood is usually just under 3/4" thick, and the thickness may vary a little across the sheet.

In this material, regular woodscrews will provide plenty of "bite."

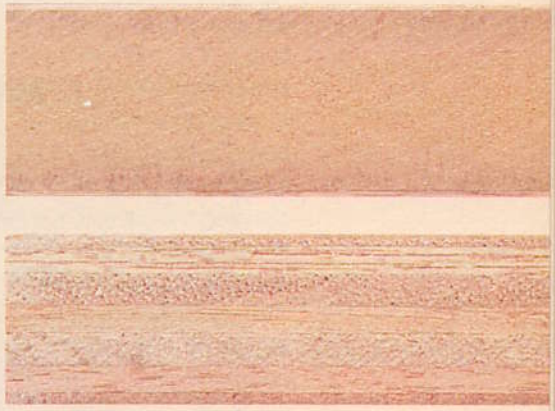

▲ *Riftsawn sheet goods may have a substrate of either MDF (top) or several layers of wood plies (bottom).*

ARTS & CRAFTS CLOCK

Decorative pegs that fit without gaps? A perfectly round clock opening? You can build this handsome clock with confidence — in a day.

It's only natural to expect big challenges from big projects. But don't sell small projects short. They may not take months to complete, but they have to be built with the same care and accuracy. In fact, a small clock like this will often get a closer inspection than a large project. People just can't resist picking it up to get a better look — which means the joints better fit tight.

DECORATIVE PEGS. This clock has one feature in particular that looks like it might require a high level of accuracy: the decorative pegs below the clock face. But even though these pegs are going get a close look now and then, you don't have to worry about getting a gap-free fit. Like the button-style plugs used to hide screws, these pegs have a lip around them, so any gaps in the fit will be covered up. All you have to do is lay out the holes carefully and follow a simple, three-step process to create the pegs.

CLOCK OPENING. And don't be worried about the circular opening for the clock face. Getting it perfectly round is a snap with an ordinary wing cutter in the drill press.

Note: Even though I used a common quartz movement for this clock, it's always a good idea to get your movement, dial, and hands before you start building. Mail order sources are listed on page 35.

MATERIALS, SUPPLIES, & CUTTING DIAGRAM

A Face (1)	½ x 5½ - 9½	
B Sides (2)	½ x 3 - 9½	
C Sub Top & Bottom (2)	½ x 4½ - 2½	
D Back (1)	¼ ply. - 5 x 9½	
E Top & Bottom (2)	½ x 4 - 7	
F Decorative Pegs (4)	¾ x ¾ - 11/16	
G Mounting Plate (1)	¼ ply. - 4½ x 4½	

- (1) Quartz Clock Movement
- (1) 4⅛"-dia. Clock Dial
- (1 pr.) Clock Hands 1⅞" Long
- (8) #6 x ⅝" Fh Woodscrews
- (8) #6 x ¾" Fh Woodscrews

½" x 5½" - 60" Cherry (2.3 Sq. Ft.)

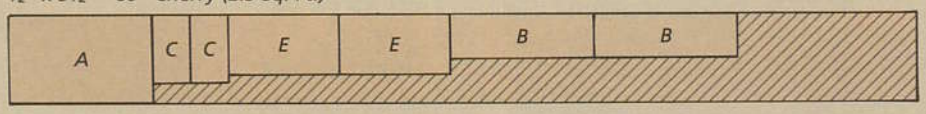

ALSO NEEDED: *One piece of ¾" x ¾" cherry (12" long) and one 12" x 12" piece of ¼" plywood*

Clock Case

As with most projects, the first question to answer is what type of wood to use to build this clock. I had some some cherry on hand, so I decided to build this clock with it. But quartersawn oak would have been another good choice, as it was traditionally used for Arts and Crafts projects.

Note: As you can see in the materials list on page 18, nearly all the solid wood parts for this clock are ½" thick. But if you're starting with ¾"-thick stock, you'll want to cut a short ¾"-wide strip for the pegs *before* planing the board down to ½"-thick. (You'll also need a couple small pieces of ¼" plywood.)

For this clock, I decided to begin by making the case pieces and cutting the joinery, as shown in Fig. 1. But these pieces won't be assembled until after the clock opening and the openings for the decorative pegs have been cut in the front face.

FACE & SIDES. The first thing to do is cut the *face (A)* to size, as in Fig. 1. And you can also cut the two *sides (B)* at this point because they're the same length as the face piece (9½").

RABBETS. The face is rabbeted on each edge to hold the sides (Figs. 1a and 2). Here, you want to be sure to end up with a nice, tight fit. I was able to use my dado blade to do this, as shown in Fig. 2. But not all dado blades will cut square shoulders, so you may want to cut the rabbets on the router table using a straight bit.

The side pieces are also rabbeted to hold a ¼"-plywood back that will be added later (Fig. 1a). Since ¼" plywood is never quite ¼" thick, I sneaked up on the size of the rabbet, testing it with a scrap of plywood.

SUB TOP & BOTTOM. The last two pieces to make (for now) are the *sub top (C)* and *sub bottom (C)*, as shown in Fig. 1. Here, I had to decide which way the grain should run. When the humidity changes, should these pieces expand and contract with the face piece or with the sides? I chose the face piece because it's wider. So the grain on the sub top and bottom pieces runs front to back (not side to side).

To size the sub top and bottom, I didn't automatically cut them to the dimensions noted. To get the best fit, their width should match the shoulder-to-shoulder dimension at the back of the face piece. To find the length of these pieces, you'll want to set a side piece into the rabbet on the face piece. Then you can measure from the inside of the face to the rabbet for the back (Fig. 1a).

The case isn't ready to be assembled yet, but as you can see in Fig. 1b, I went ahead and drilled some countersunk shank holes in the sub top and bottom for attaching the top and bottom panels later.

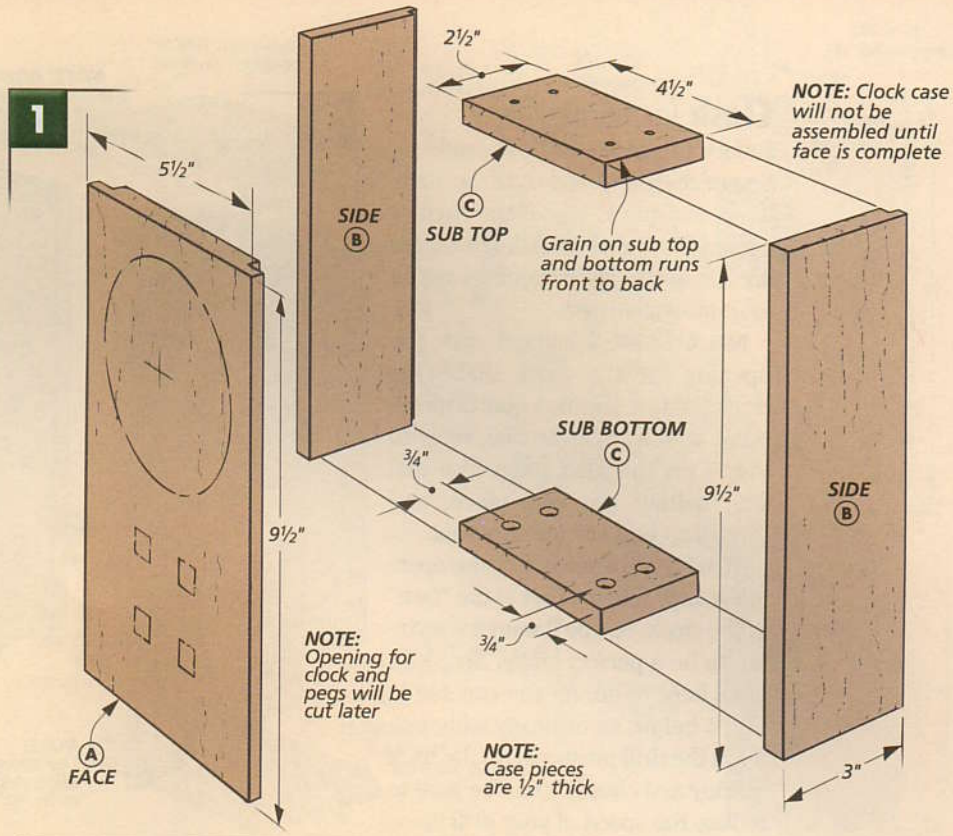

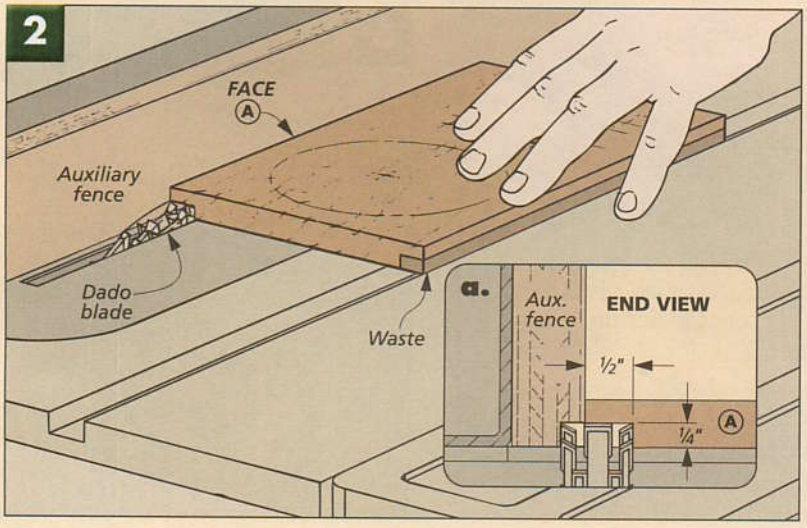

Clock (continued)

Before the case can be assembled, several openings will need to be made in the face piece. One is the circular opening for the clock dial. The others are the small square openings for the four decorative pegs.

DIAL OPENING. I started with the opening for the clock dial. This clock holds a common quartz movement with a separate dial, refer to Fig. 7 on the next page. The dial sets behind the face piece, and there's no bezel or glass in front.

What this means is that the opening is very much a part of the "face" of the clock. So you'll want the opening to be a perfect circle. This isn't at all hard to do. As you can see in Fig. 4 below, an ordinary wing cutter in the drill press will do the trick quickly and cleanly. (Just be sure to reduce the speed of your drill press to its slowest setting.)

Note: You don't have to own a wing cutter to make the opening. After drawing a 4"-dia. circle, drill a small starter hole and remove most of the waste with a sabre saw or scroll saw. Then carefully sand up to the line with a drum sander.

With the opening created, the next step is to rout a 1/4" chamfer around the outside face of the opening, as shown in Fig. 5. I did this in two passes because cherry burns easily, and I didn't want to risk ruining the circular opening by having to do a lot of sanding to the chamfer.

PEG OPENINGS. Now that the clock opening is done, it's time to work on the four square openings for the decorative pegs. While these openings need to line up with each other, they don't need to be perfect (like the clock opening) since they'll be hidden by the pegs later.

The first thing to do is lay out the openings on the face piece, as in Fig. 3 above. Then you can remove most of the waste by drilling 3/8"-dia. holes (Fig. 6). The last step is to square up the holes with a chisel. And to make sure they line up, you'll want to use a straightedge to guide the chisel, as shown in Fig. 6.

ASSEMBLE CASE & BACK. Now that the face piece is complete, the case can be glued together. And while it's drying, a 1/4" plywood *back (D)* can be cut to fit the opening in the back.

The back won't be screwed to the case until after the clock has been installed, but at this point, I added a small finger hole to make it easier to remove the back (when changing the batteries or adjusting the hands.)

TOP & BOTTOM. The next pieces I added were the *top* and *bottom (E)* of the case (Fig. 7). They're sized to overhang the front and sides 3/4". Then their front and side edges are chamfered. As you can see in Fig. 8, I did this on the table saw, using a tall auxiliary fence to support the

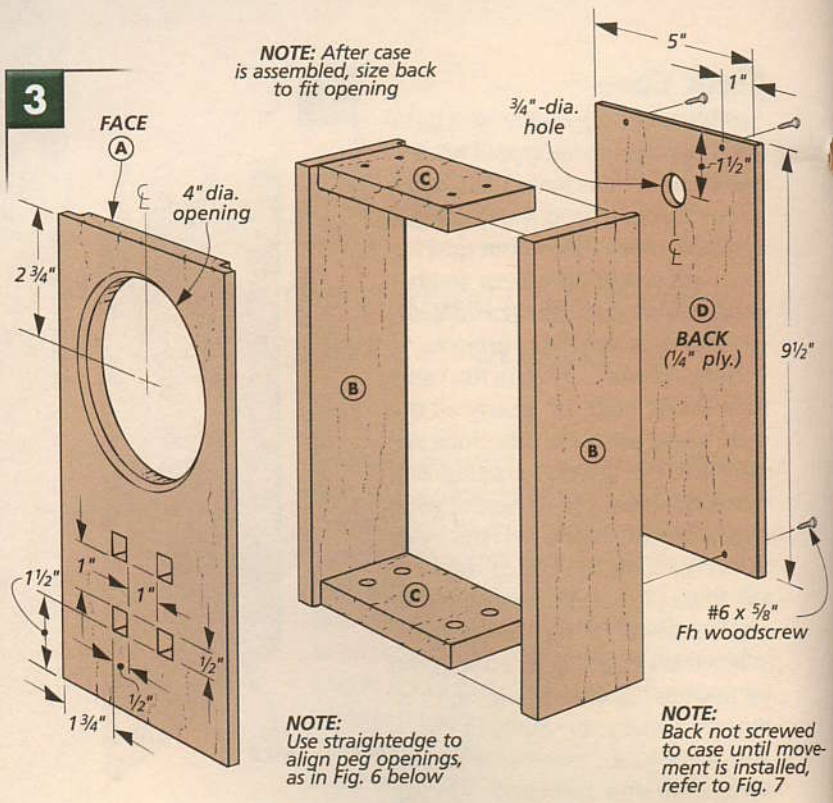

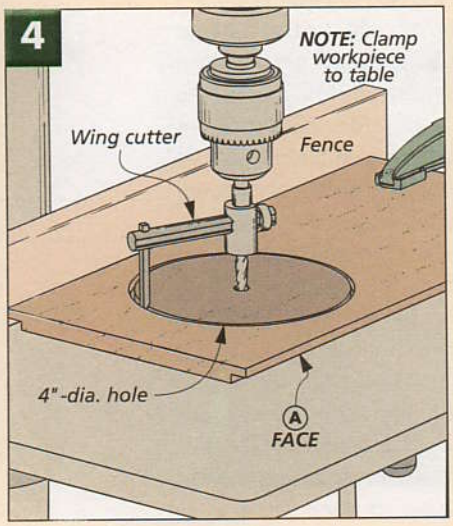

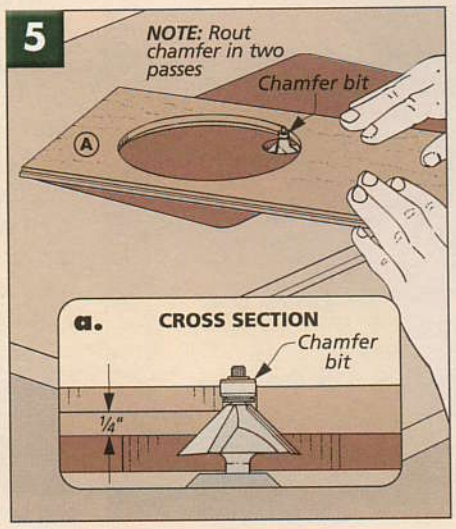

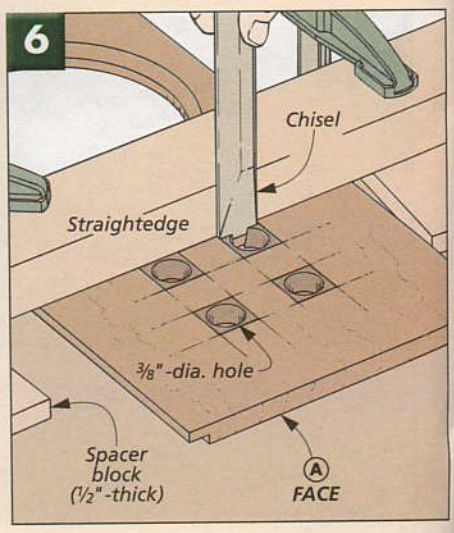

pieces. Then the opposite edge can be softened with sandpaper (Fig. 7).

DECORATIVE PEGS. With the top and bottom pieces screwed to the case, it's time to make the *decorative pegs (F)*. Here, you'll need a strip of 3/4" x 3/4" cherry. And to shape the pegs safely, I started with a 12"-long blank and used the three-step process shown in the box below. (Work at both ends of the blank, so you can make two pegs at a time.)

FINISH. The pegs are simply glued into their openings. But if you plan to stain the clock, then it would be a good idea to do this before you add the pegs. That way, you can wipe off the stain evenly without having to work around the pegs. (Note: For this clock, I simply applied a few light coats of a wipe-on finish.)

MOUNTING PLATE. The clock dial and quartz movement are mounted to a 1/4" plywood *mounting plate (G)* that's sized to fit inside the case opening, as shown in Figs. 7 and 7a.

The only thing to do to this plate is drill a 3/8"-dia. hole for the clock shaft. I wanted to double check that this hole was going to end up centered in the opening on the face. So I set the plate in the case and traced the opening on it. Then after the hole is drilled and the clock dial and movement are mounted (Fig. 7), I screwed the plate inside the case and attached the plywood back.

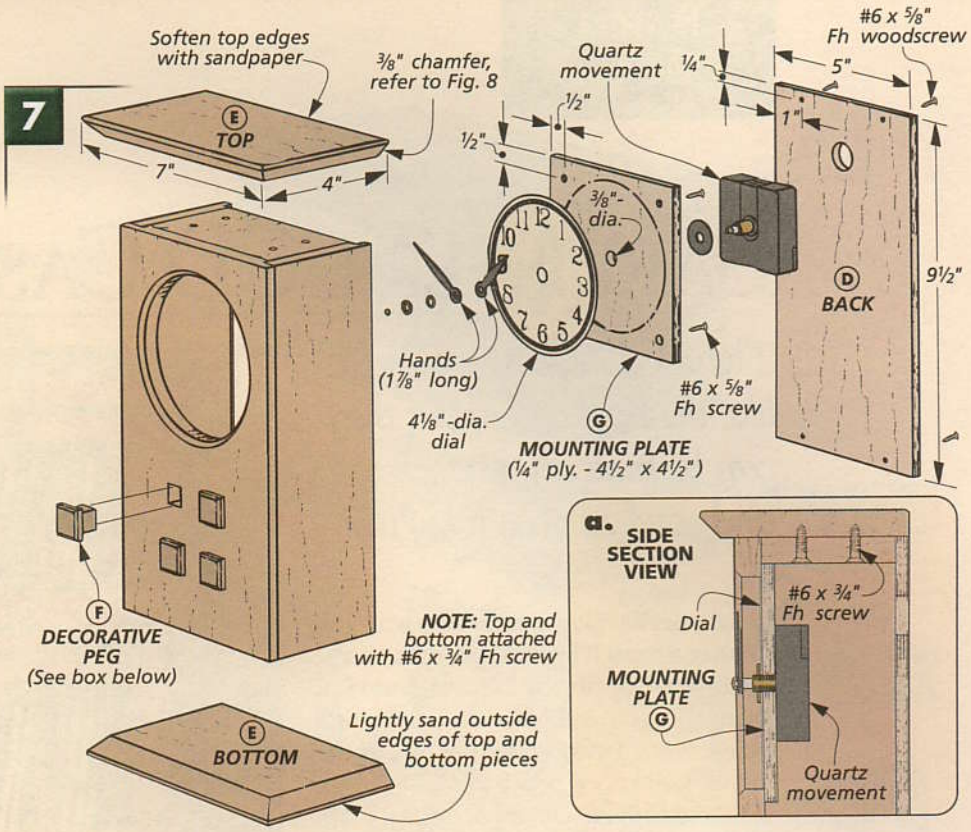

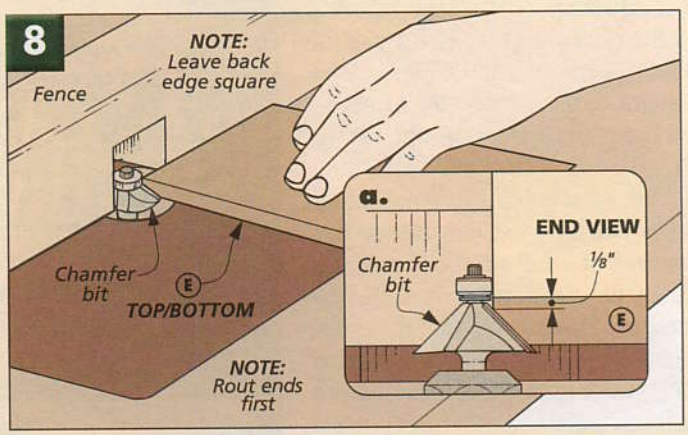

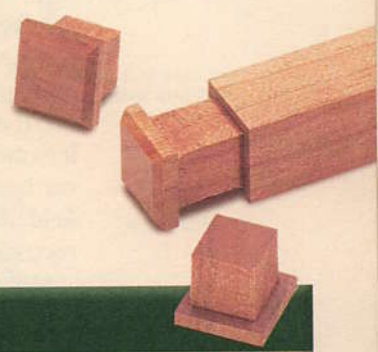

DECORATIVE PEGS IN THREE STEPS

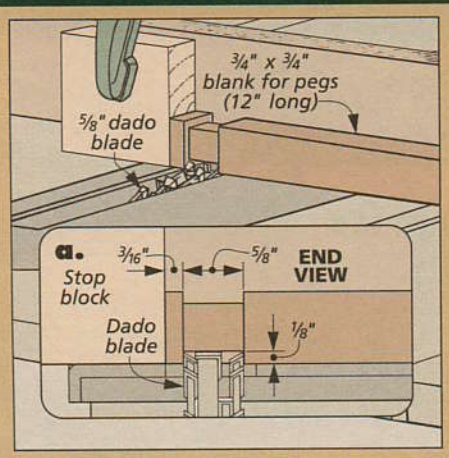

1 Starting with a 3/4" x 3/4" blank (12" long), cut a 1/8"-deep dado 3/16" from the end on all four faces of the blank.

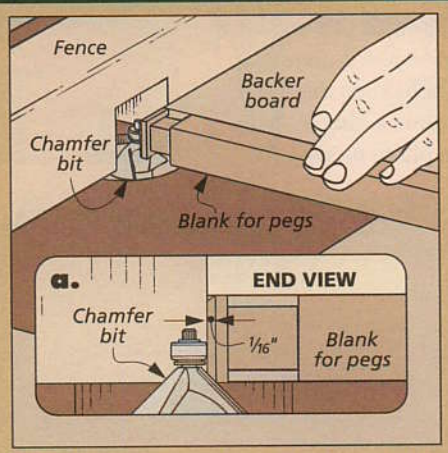

2 Next, rout a 1/16" chamfer around the end of the blank, using a backer board to guide the blank and prevent chipout.

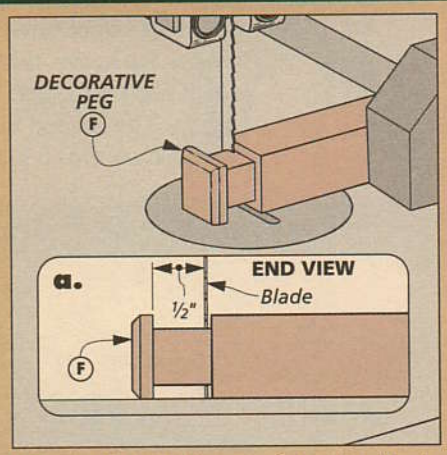

3 Finally, cut the peg from the blank, using either a band saw or hand saw. (The peg should be roughly 11/16" long.)

BARRISTER'S CD CASES

These CD cases work just like the bookcases, but they can be built on a bench top and stacked on a table top.

Sometimes working on a smaller scale can be a real treat. While building these cases, I really liked the fact that I didn't have to find room all over the shop to store the workpieces. When I stopped for the day, all the parts fit right on my bench top.

Although these cases are scaled-down versions of a barrister's bookcase, there's more to it than just shrinking all the pieces. The smaller size meant using different joinery than might be used on its "big brother." In fact, all the joinery is cut on the router table with just a couple of straight bits.

FEATURES. But even though it's smaller and the joinery is a bit different, this CD case has all the features of a full-size bookcase. As you'd expect, the doors pivot up and slide into the case to allow access. And the cases can be stacked on top of each other. A raised field on the top of each case "locks" into a recess in the case above it (see inset photo).

BASE. As for the base of this project, there are a couple of options. The first is the pedestal base shown in the main photo. Since a stack of cases filled with CDs will be rather top-heavy, this base has a compartment filled with sand to help keep the stack stable. The second option is a simple, low-profile base shown in the photo on page 27.

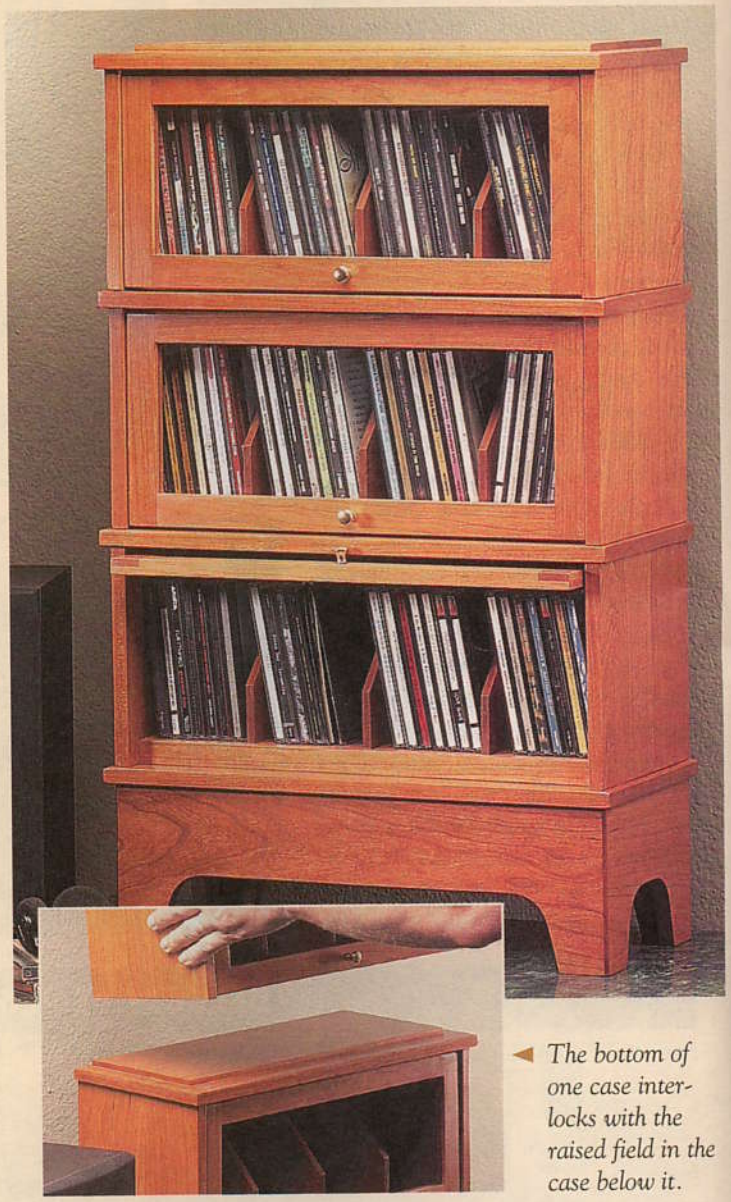

The bottom of one case interlocks with the raised field in the case below it.

MATERIALS & SUPPLIES

A	Tops (2)	3/4 x 7 1/4 - 16 1/2
B	Bottom (1)	1/2 x 5 3/4 - 15 1/2
C	Sides (2)	1/2 x 7 - 7
D	Edging (1)	1/4 x 3/4 - 15
E	Dividers (3)	1/4 x 5 3/4 - 4
F	Door Rails (2)	1/2 x 1 - 14 15/16
G	Door Stiles (2)	1/2 x 1 - 6 9/16
H	Glass Stop	1/4 x 1/4 - 42 In. in.
I	Back (1)	1/4 ply. - 7 x 15 1/2
J	Base Front/Back (2)	1/2 x 5 - 16
K	Base Sides (2)	1/2 x 5 - 6 3/4
L	Base Bottom (1)	1/4 ply. - 6 1/2 x 15 1/2

- (1) 1/2" x 1/2" Brass Knob w/Screw Stud
- (1) 1/8"-thick Glass Panel (4 15/16" x 13 5/16")
- (10) 5/8" Brads
- (1) 1/4"-dia. Dowel, 4" long
- (2) 1/4" Felt Dots
- (4) #6 x 1" Fh Woodscrews
- (4) #4 x 3/4" Fh Woodscrews

Note: Materials listed are for one case and base

Construction Details

OVERALL DIMENSIONS:
16½"W x 7¼"D x 13¹⁄₁₆"H (Base and one case)

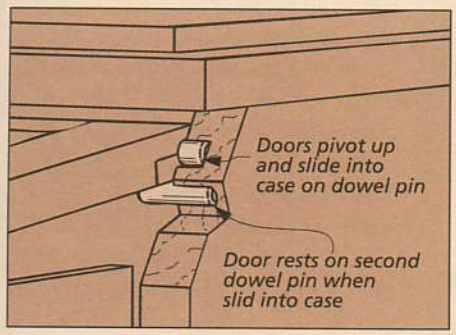

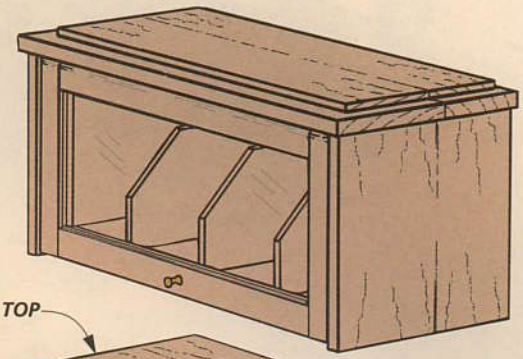

NOTE: *Each case holds 32 CDs*

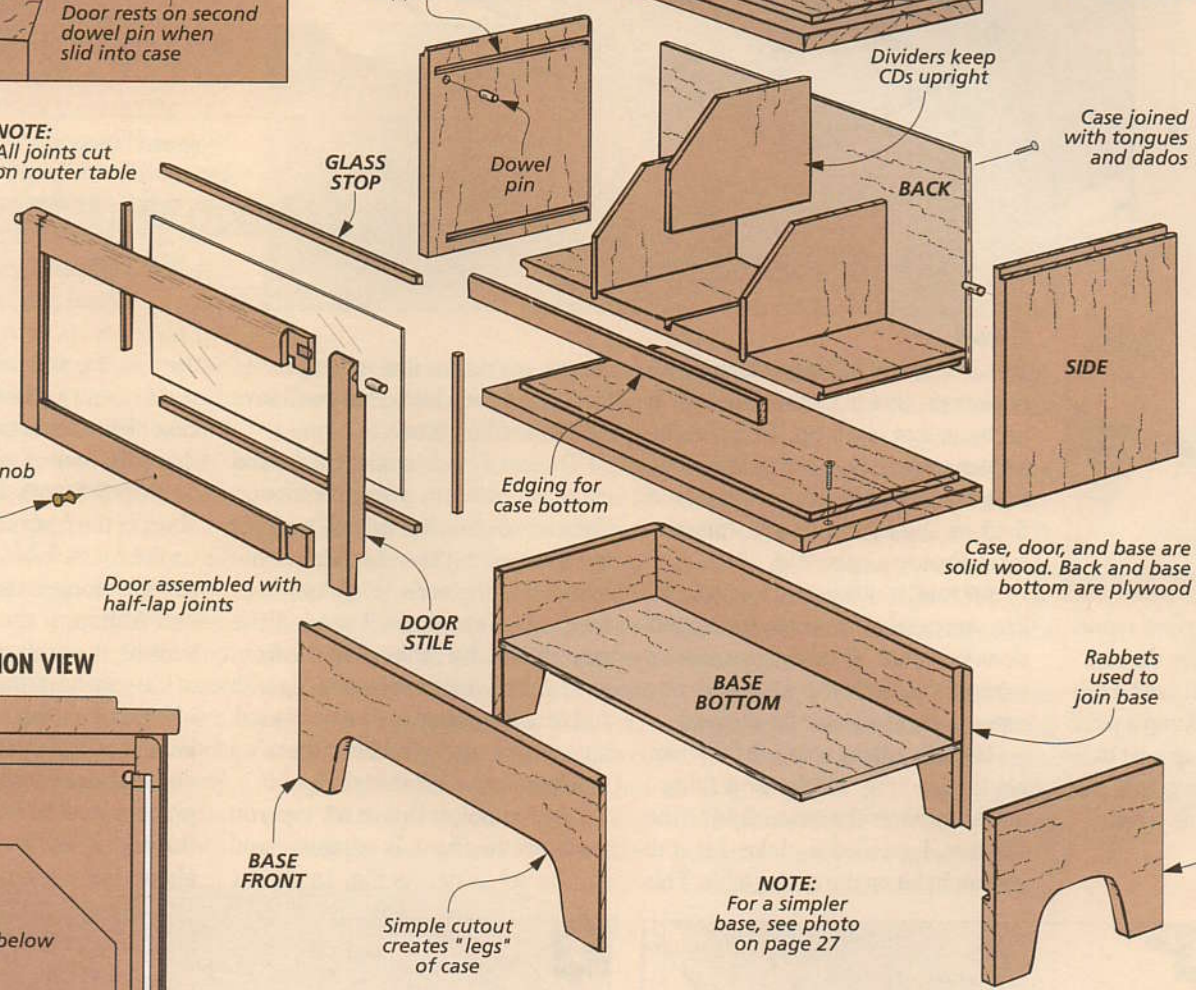

SIDE SECTION VIEW

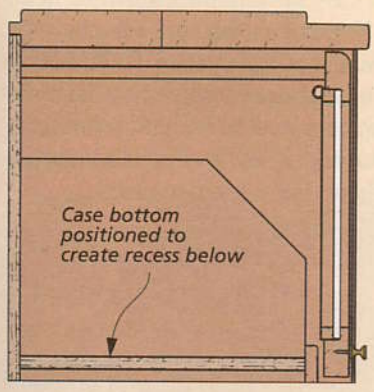

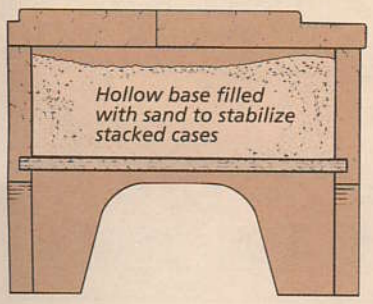

CUTTING DIAGRAM

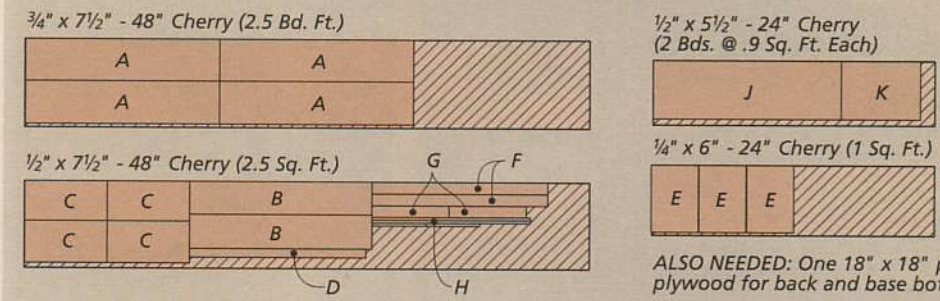

ALSO NEEDED: One 18" x 18" piece of ¼" plywood for back and base bottom

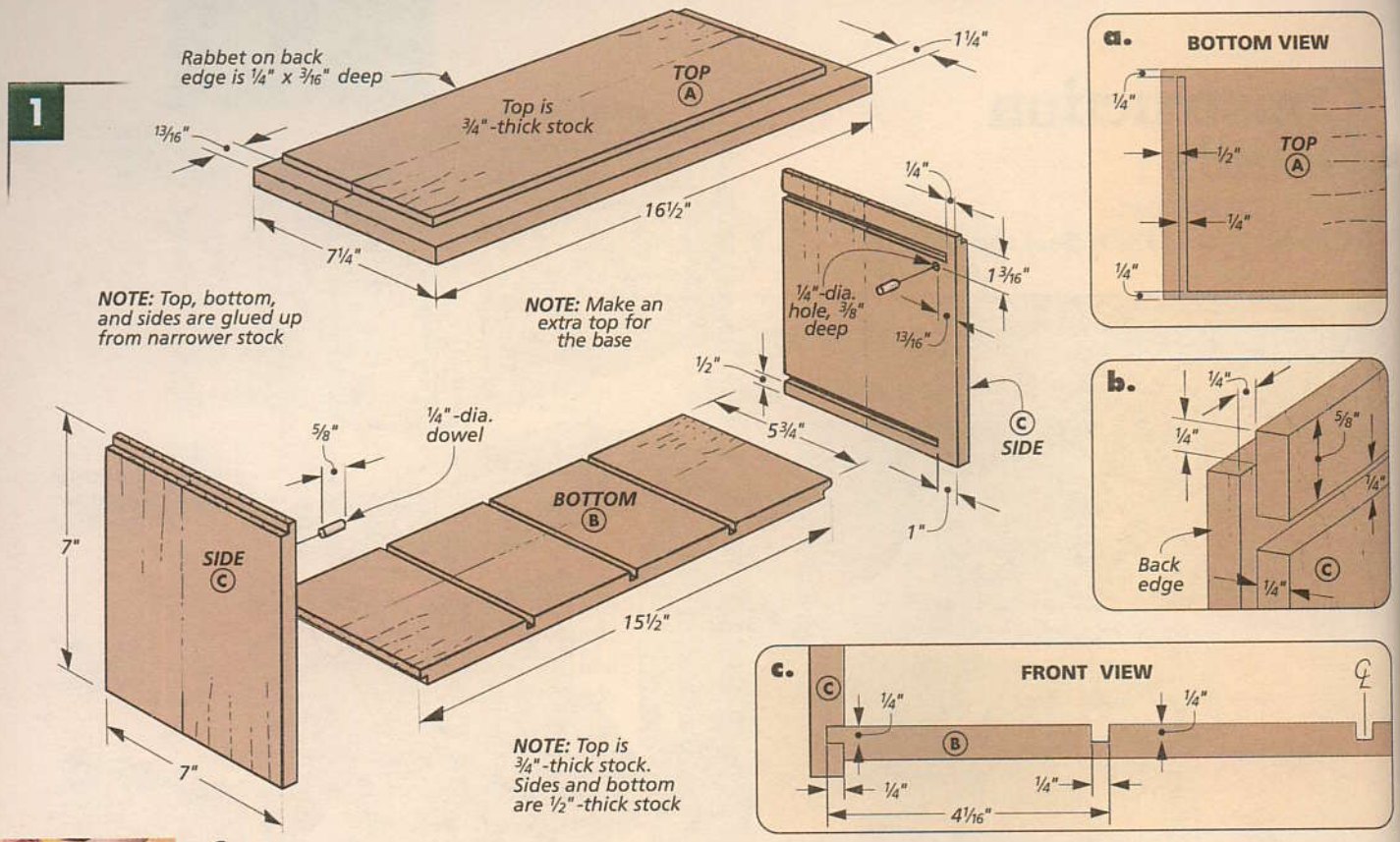

▲ *To prevent rounding over the edge as you sand a rabbet, clamp a piece of scrap next to the rabbet to help support the sander.*

Case

Just like many full-sized barrister's bookcases, these CD cases are built in sections that stack up. To make the sections interlock, a recess in the bottom of each case fits over a raised field on the case below it. (See the inset photo on page 22.)

TOP PANELS. Before you begin building, you need to know how many sections you want. Then you can glue up a panel for each *top (A)*, plus one extra to be used later for the base.

TOP FACE. After cutting the top panels to size (Fig. 1), the first thing I worked on was the raised field on the top face. I decided to make this with a straight bit on the router table. This means making a few more passes than with a dado blade, but you'll save a lot of sanding time.

To start, I made a skim cut around each top panel to prevent chipout. You can see this in Fig. 2. Then I set the fence to cut the shoulder of the rabbets on the ends (Fig. 3a). Once the ends were done, I moved the fence to cut the rabbets on the front and back edges, as shown in Figs. 3b and 3c. (If you need to do a bit of sanding to clean up the rabbets, there's a quick tip in the left margin.)

At this point, the extra top you made for the base is complete and can be set aside. As Fig. 1a shows, the case top still needs some dadoes and a rabbet for joining with the other case pieces. I started with the dadoes that will connect with the sides.

STOPPED DADOES. These dadoes stop short of the front edge, so they're cut on the router table. (There are three pairs of stopped dadoes on this project. Although they're all different lengths, the process for cutting them is the same.) Routing one dado involves pushing the piece into the bit and stopping (Fig. 4). The other dado is routed by plunging the workpiece onto the bit and pushing it through (Fig. 5). For more details about this, refer to page 16.

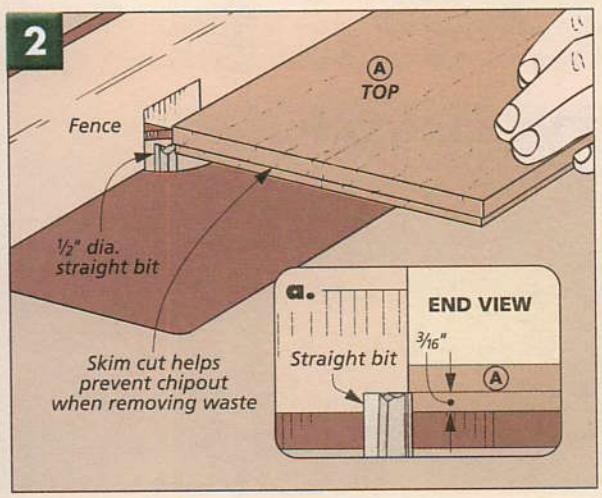

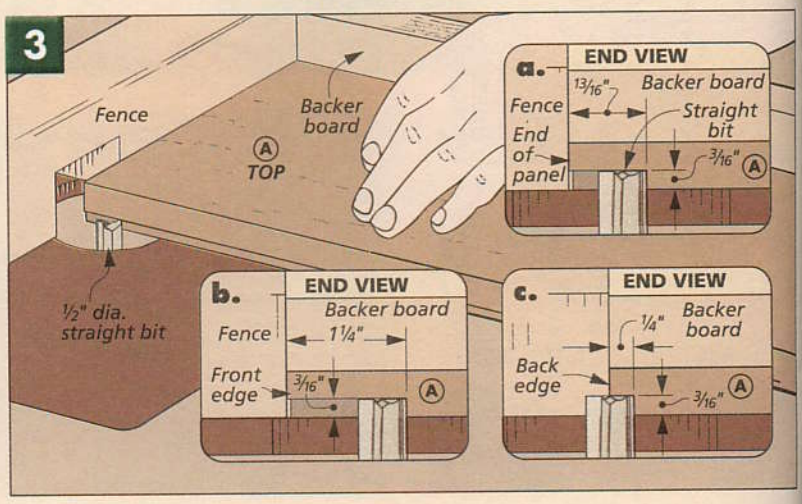

After the dadoes are cut, a rabbet is routed between them. You can use the same bit used to cut the dadoes. Just position the fence flush with the back edge of the bit like you see in Fig. 6. This time, instead of drawing start and stop lines on the fence, I marked the top of the workpiece to show the locations of the dadoes.

BOTTOMS. Next, a ½"-thick panel can be glued up for each *bottom (B)*. As you can see in Fig. 1, the bottom is narrower than the sides and top. This leaves room for the door to hang in front of the bottom panel.

After cutting the bottom panel to size, a rabbet is routed on each end to leave a ¼"-thick tongue (Fig. 1c).

Later, three dividers will be added to support the CDs. Each divider will rest in a dado routed all the way across the bottom (Fig. 1c). But don't worry — the front edge gets covered by a piece of edging later.

SIDES. Now you can work on the *sides (C)*. Like the other pieces, these are glued-up panels with stopped dadoes and rabbets. But the trick here is the sides aren't identical — they end up as mirror images of each other.

RABBETS. I routed the rabbets on the top and back edges first (Fig. 1b). The rabbet along the top creates a tongue that fits the dado in the top piece. And the rabbet along the back edge will accept the back panel later.

DADOES. The next things to work on are the two stopped dadoes — one near the top for the door to slide in, and another to hold the bottom panel.

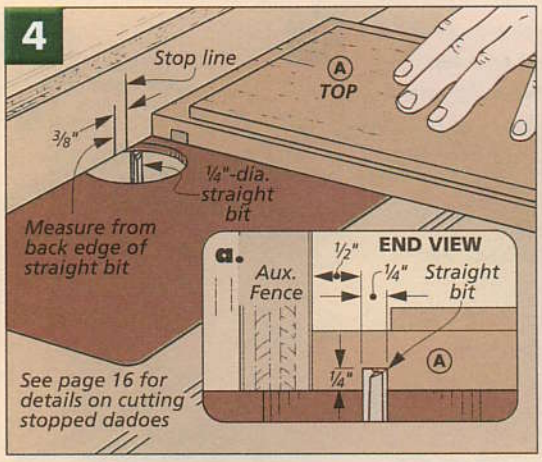

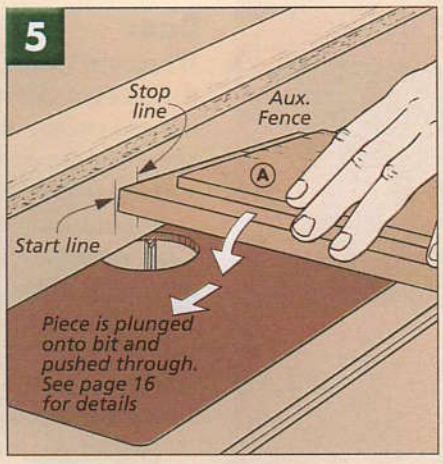

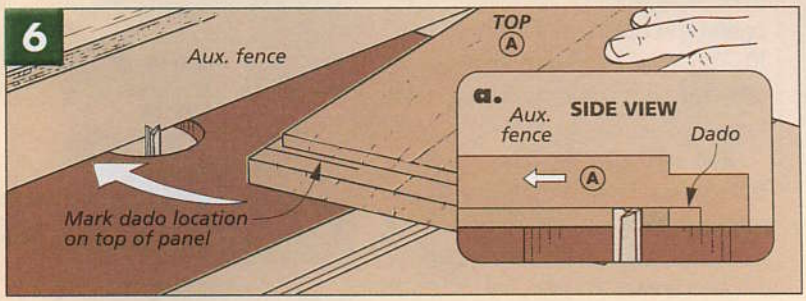

The technique for routing these dadoes is the same one used earlier (refer to page 16). Just remember to make new marks on the router fence each time. If you look at Fig. 1, you'll see that the lower dadoes stop farther from the edge than the upper ones. Also, the lower dadoes are positioned so the bottom panel sits above the bottom of the sides. This creates the recess that will fit over the raised field on the top panel below (Fig. 1c).

PIVOT PIN. There's just one more thing to do before assembling the case. To support the door when it's slid into the case, a short dowel needs to be added to the inside of each side as shown in Fig. 1. Then the four case pieces can be glued together.

EDGING. Only a few pieces are left to complete the case. First, to form the front edge of the recess, *edging (D)* is cut to fit between the sides of the case, as shown in Fig. 7. It's then glued flush with the top edge of the bottom panel (Fig. 7b).

DIVIDERS. Finally, I added three *dividers (E)* so the CDs wouldn't fall over if the case wasn't full. To make it easy to grab a CD, I cut away the front corners of the dividers (Fig. 7a) before gluing them in place.

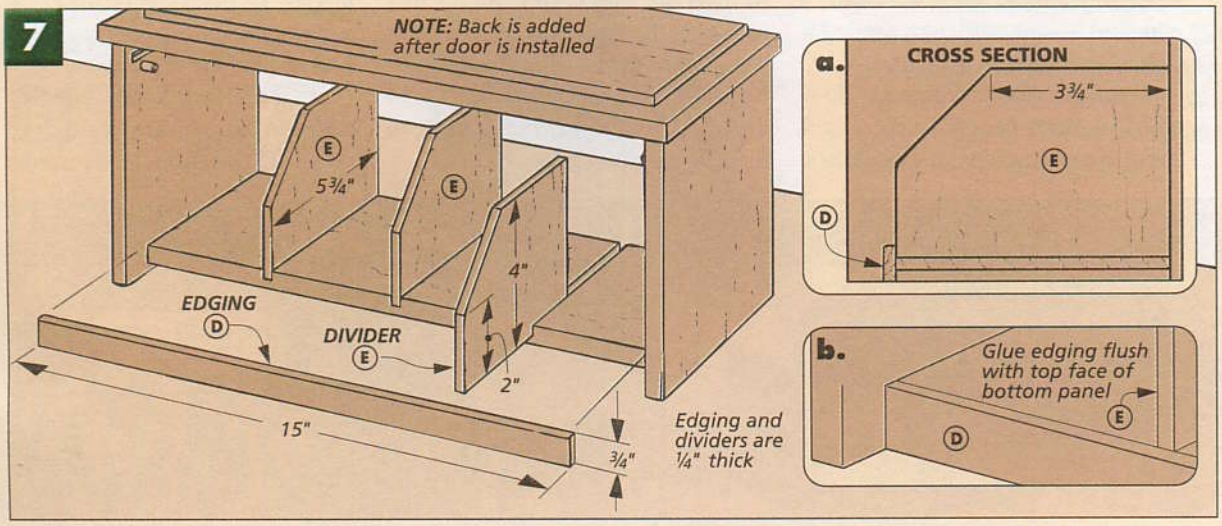

▲ *Like a barrister's bookcase, these cases have glass-paneled doors and rest on a separate base.*

Door

Whenever I stand next to a barrister's bookcase, it's hard to resist opening and closing the doors at least once. The same holds true for this scaled-down version.

Although this door works the same way as the full-size one, it's built differently. Instead of mortises and tenons, the small doors can be joined with half laps. It's plenty strong — plus there's just one setup needed to cut the joint instead of two.

To start, the *rails (F)* can be cut to length so they're 1/16" less than the opening at the front of the case (Fig. 8). The *stiles (G)* are cut to length to allow the back corner to clear the bottom panel when the door is opened.

HALF LAPS. Like the other joints on this project, I cut the half laps on the router table with a straight bit, as shown in Fig. 9. With just one setup, this joint is easy to make, but there are still a few tips to pass along, which you'll find on page 16. Once the joints are cut, you can glue up the door.

Next, to provide clearance as the door is swung open, a 1/4" roundover is routed on the top outside edge of each door (Fig. 8a).

DOWEL PINS. The doors pivot and slide with the help of a pair of dowel pins that travel in the stopped dadoes in the side panels. As you can see in Fig. 10a, the holes for the pins are centered on the thickness of the door. This puts the hole right in the joint line. So to prevent any splitting, I did a couple of things. First, I clamped the door to my bench (Fig. 10). Then, since my dowel fit a bit tight, I chucked it in my drill and sanded it lightly to reduce its diameter.

ADD GLASS. The next thing to do is add the glass panel. To do this, I routed a rabbet around the inside face of the door to accept the glass. As you can see in Fig. 11, this is done on the router table with a rabbet bit. Then the corners of the rabbet can be squared up with a sharp chisel.

Next, I made some *glass stop (H)* to hold the glass. You can do this safely on the table saw by following the steps in the margin. Once you've ripped enough stop to size to fit around the door, it can be cut to length, as shown in Fig. 8.

Although it's tempting to install the glass now, it's a good idea to apply a finish to the case, door, and glass stop first. I wiped on a couple coats of a one-step oil and urethane top coat.

After the finish has dried on these pieces, the glass can be installed. To prevent the glass stop from splitting, I pre-drilled the brad holes.

The last few items have to be added to the door after it's in place, so go ahead and slide the door into the

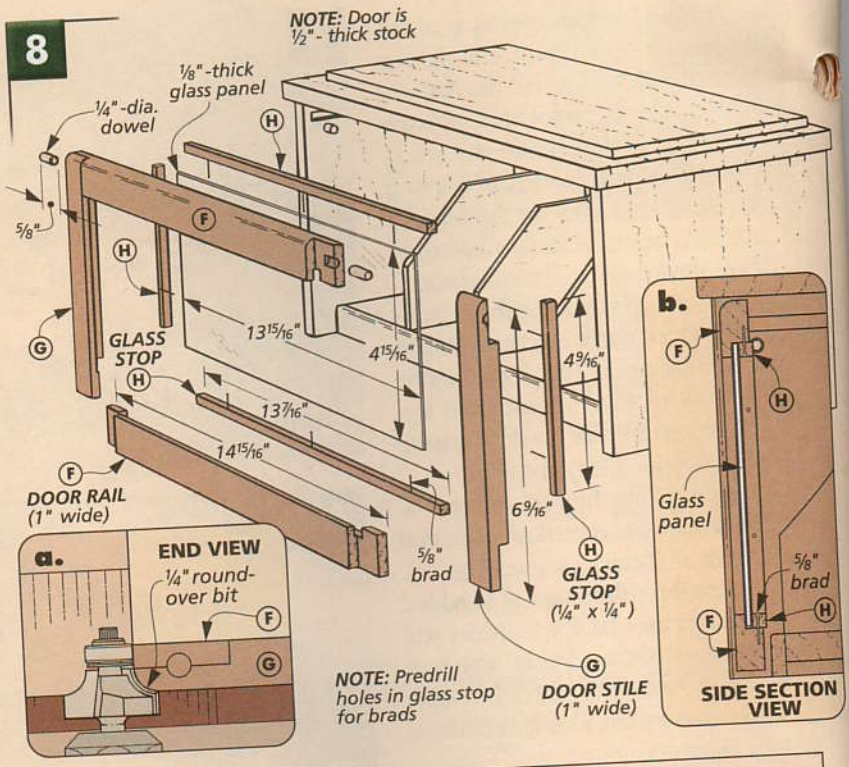

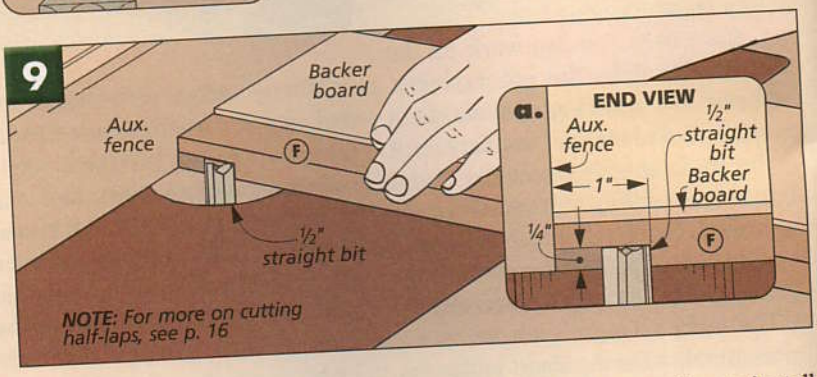

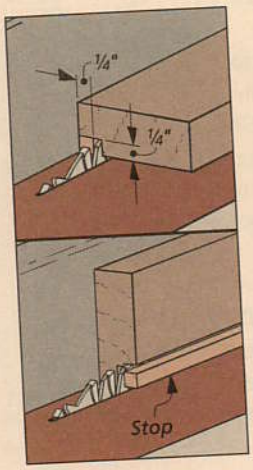

▲ *The glass stop can be cut with two passes on the table saw. I use a zero clearance insert around the blade.*

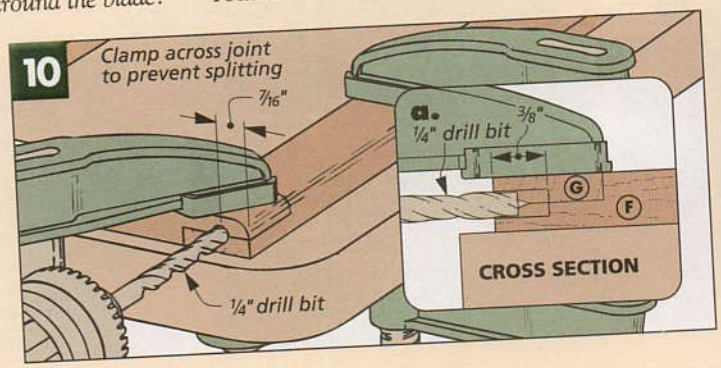

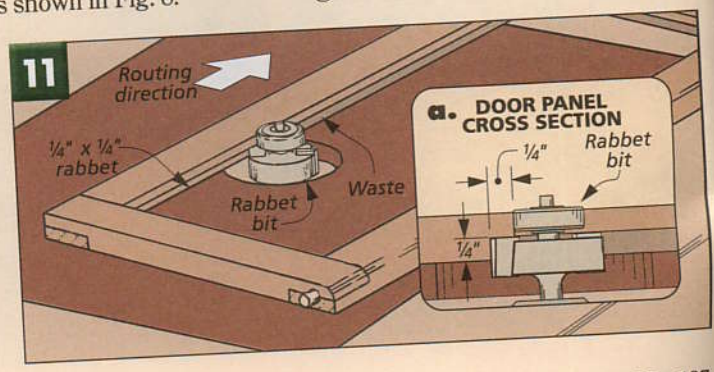

case from the back, like you see in Fig. 12. Once the door was installed, I centered a knob on the bottom rail and added a couple of felt dots to keep the door from banging (Fig. 12c).

BACK. Now to complete the case, a 1/4" plywood *back (I)* can be added. As you can see in Fig. 12, it's cut to fit the opening in the back and is held in place with small screws. This way, you'll be able to remove the back if the door ever needs repaired.

BASE

There are a couple of options for the base, depending on where you'll be setting the case. If you plan to stack several cases (especially on a carpeted floor), the weighted pedestal base shown in Fig. 12 is a good idea. For a single case sitting on a desk top, the extra top you made earlier will work just fine as shown in the photo below.

PEDESTAL BASE. The pedestal base starts with four pieces of 1/2"-thick stock. The *base front* and *back (J)* and *sides (K)* can all be cut to size as shown in Fig. 12. The side pieces fit into rabbets cut in the front and back, so I routed these next (Fig. 13).

After that, a groove needs to be cut in each piece to accept the plywood bottom that's added later. I did this on the table saw with a regular blade, like you see in Fig. 14. Just move the rip fence slightly between passes to widen the groove.

CUTOUT. To lighten the look of the base, a cutout on each piece forms "legs" at the corners. If you look at the pattern in the margin, you can see how this is laid out. The shape can be roughed out on the band saw or with a jig saw. I then fastened the pieces together with carpet tape and sanded to the line with a drum sander.

BOTTOM. Now you can dry assemble the base pieces and measure for the 1/4" plywood *base bottom (L)*. Once it's cut to size, the base pieces and the bottom can be glued together.

Buiding the base with a rabbet joint makes assembly easier but leaves a small line of end grain exposed on the sides. There's a simple trick that will make this end grain virtually disappear. Just chamfer the corners of the base (Fig. 12d).

Before screwing on the extra top that was made earlier, I filled the base with sand. Then I softened the exposed edges of the base with a light sanding and applied a finish. W

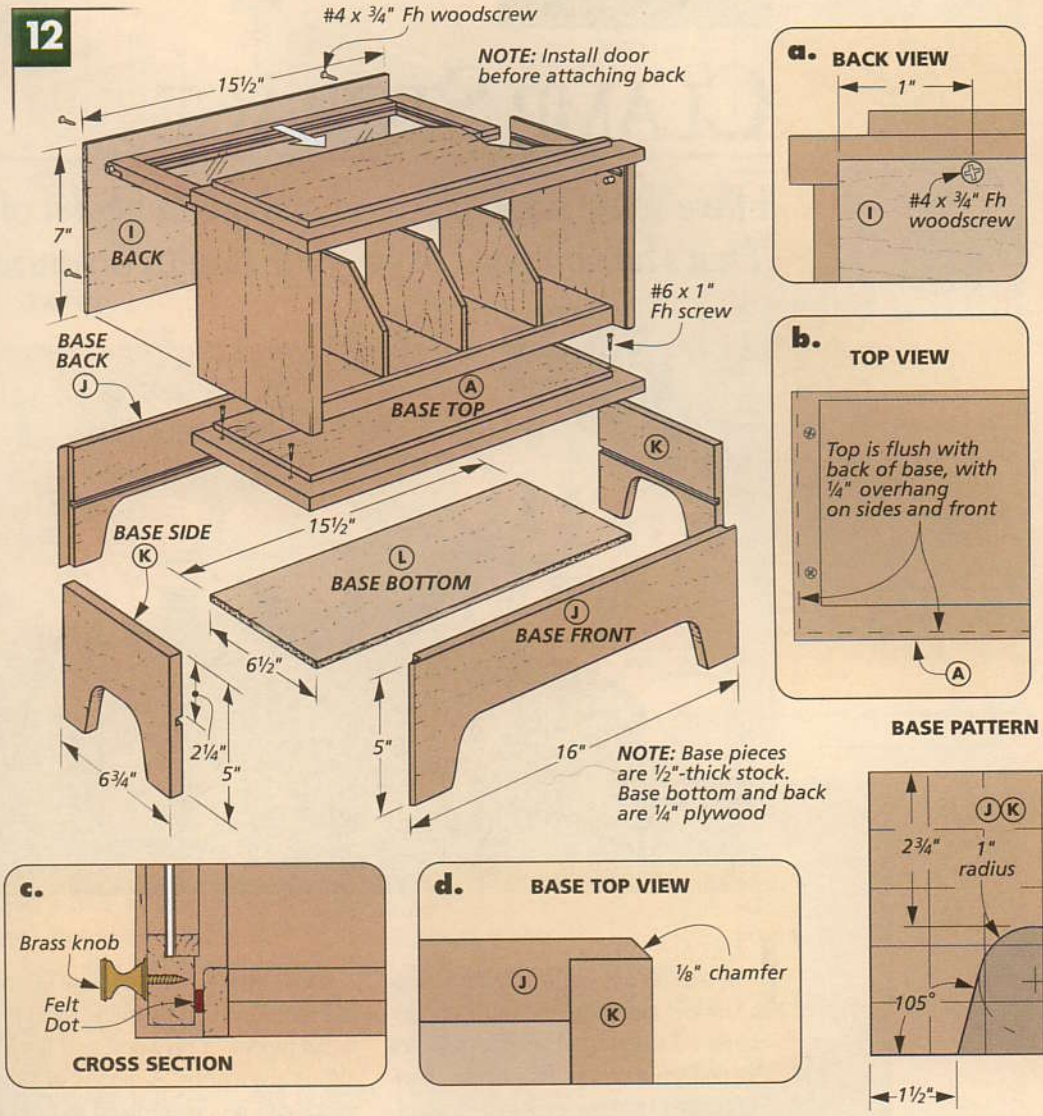

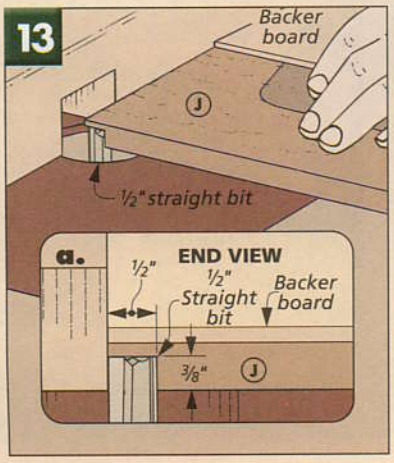

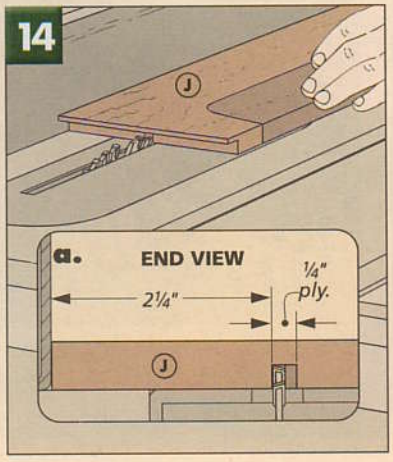

For a case that sits on a desk top, just use the extra top as a base. It will lift the case enough to make it easy to grab the knob and open the door.

SHOP PROJECT

CLAMP STORAGE

Have some scrap plywood and an empty bit of wall space? That's all you need to get your clamps organized.

There's an old saying that a woodworker can never have too many clamps. I know that over the years I've collected quite a few. In fact, finding space to put my ever-growing collection was becoming an issue.

What I needed was a better way to store and organize my clamps. And the new "system" had to be easy to build and add on to. That way, as I got more clamps I could make a new rack for them quickly.

SIMPLE DESIGN. What I came up with is a rack that can be made from four small pieces of plywood and fits just about anywhere. A series of these racks can be customized to hold all types of bar and pipe clamps. And as you can see in the photos below, I even made a couple of extra racks to hold gluing supplies and C-clamps.

One thing all the racks have in common is that they are designed to screw to the wall. So you can fit clamp storage wherever you have an open bit of wall space.

ROLL-AROUND CADDY. If you're short of wall space, don't worry. The racks can also be attached to a handy roll-around caddy. In fact, even if you have plenty of wall space, you may want to consider building the caddy anyway. It holds all of your clamps in one place and makes it easy to roll them to wherever your project may be.

▲ *A storage box keeps glue and accessories organized. Mounting it near the clamps makes it handy.*

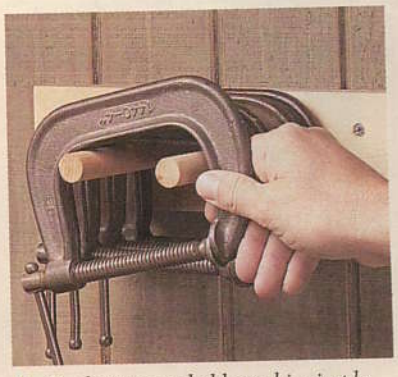

▲ *C-clamps are held on this simple rack. It can be custom built to fit different sizes of clamps.*

▲ *Pistol-grip clamps can be cinched down on a rack, ready to grab and be put to work.*

Racks

The heart of this clamp storage system is an L-shaped rack braced at each end by a triangular support. Each rack is the same size. The only difference is the slots that are customized for different types of clamps.

All of the pieces are made from 3/4" plywood (although hardwood would work as well). In fact, I built my racks from pieces of scrap plywood that were too small for projects but too big to throw out.

To keep things simple, I made each rack 12½" long. That way they fit in small bits of wall space as well as on the optional roll-around caddy. But they can be made any length you like to accomodate your clamps.

CUT PIECES. The first step was to cut a *top (A), back (B),* and two *supports (C)* to size for each rack, like you see in Fig. 1. (I made the supports by ripping a long 3¼"-wide blank, then making alternating 45° cuts on the end.)

Before assembling the racks, I took the time to drill a couple of countersunk holes in each back piece (Fig. 1a). These are used to screw the completed rack to a wall.

SLOT LAYOUT. The next step is to lay out the slots for the clamps in each top piece. The detail drawings in Figure 1 show racks for the most common types of clamps. Small bar clamps sit fairly close together (Fig. 1b). I-beam clamps need more room between slots (Fig. 1c). And Fig. 1d shows the spacing for pipe clamps. Note: Racks for pistol-grip clamps don't need slots. Refer to the lower right photo on the opposite page.

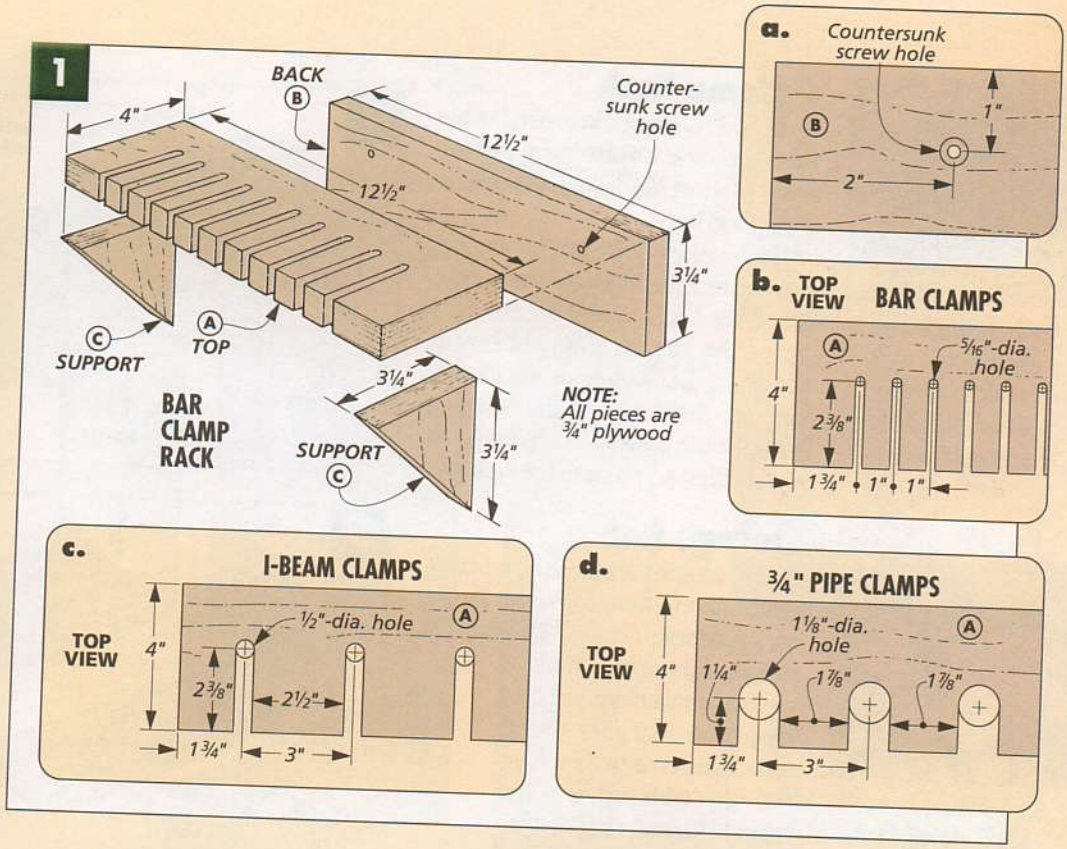

CUT SLOTS. After the slots are laid out, you can start cutting them. I found the best way to do this was to drill a hole at the top of each slot first, like you see in Fig. 2.

After the holes are drilled, the waste can be removed on the table saw. As Fig. 3 shows, I attached an auxiliary fence to my miter gauge to support the workpiece and prevent the waste piece from kicking back.

ASSEMBLY. Once the slots are cut, the rack can be glued up. The top is clamped to the top edge of the back; then the supports are added.

With my long clamps taken care of, I turned my attention to my C-clamps and accessories.

MATERIALS

Bar & Pipe Clamp Rack		
A	Top (1)	¾ ply. - 4 x 12½
B	Back (1)	¾ ply. - 3¼ x 12½
C	Supports (2)	¾ ply. - 3¼ x 3¼
C-Clamp Rack & Storage Box		
D	C-Clamp Back (1)	¾ ply. - 3¼ x 12½
E	Dowels (2)	¾ dia. x 5½
F	Box Front (1)	¾ ply. - 4 x 12½
G	Box Back (1)	¾ ply. - 4½ x 12½
H	Box Sides (2)	¾ ply. - 4 x 4½
I	Box Bottom (1)	¾ ply. - 4½ x 11
Clamp Caddy		
J	Sides (2)	¾ ply. - 14 x 48
K	Bottom (1)	¾ ply. - 14 x 25½
L	Divider (1)	¾ ply. - 25½ x 47½
M	Base (1)	¾ ply. - 22 x 28

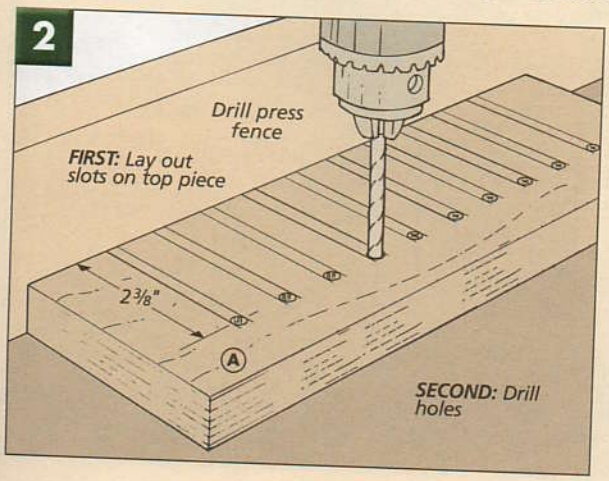

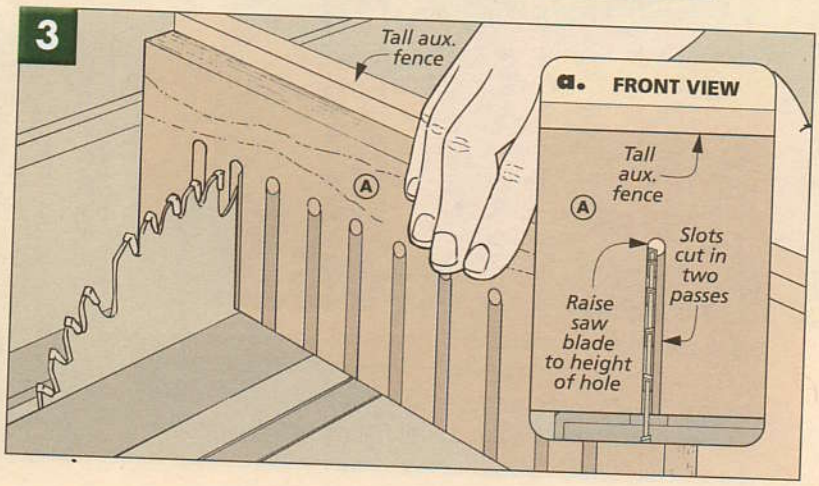

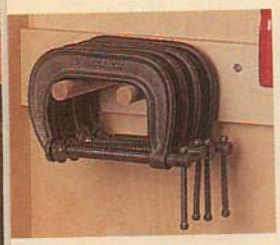

▲ *C-clamps hang neatly on a rack made with a plywood back and a couple of dowels.*

C-Clamp Rack

To keep 4" C-clamps in order, I made this small rack. It's nothing more than a pair of short ¾" dowels attached to a plywood back.

If you take a look at Fig. 4a, you can see that the holes for the dowels are drilled at a slight angle. This keeps the clamps from sliding off the front. For larger or smaller C-clamps, just change the spacing between the dowels. The completed rack is then screwed to the wall.

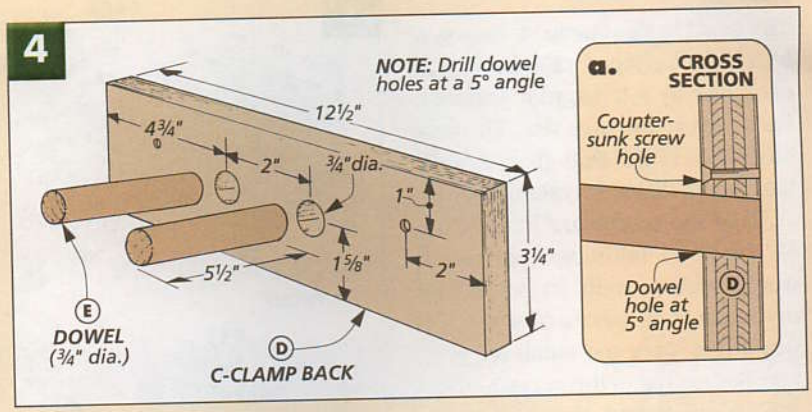

▲ *A storage box will hold gluing accessories and keep them close at hand during assemblies.*

Storage Box

Once you start a glue-up, you can't really stop to hunt for some accessory you forgot. That's why I like this simple storage box. It gives me one convenient place to keep bottles of glue, clamp pads, band clamps, brushes, and other odds and ends that seem to "wander off" just as I'm ready to start a glue-up.

Like the racks, the box is made from ¾" plywood. And keeping with the modular design of the storage system, the box is the same length as the racks. If you look at Fig. 5, you can see one thing that's a little unusual about the box — the back is ½" taller than the front. As you can see in Fig. 5a, this allows the mounting screws to be up higher so they can be reached easily with a screwdriver. (It's a good idea to drill the holes for these screws before the box is glued up.)

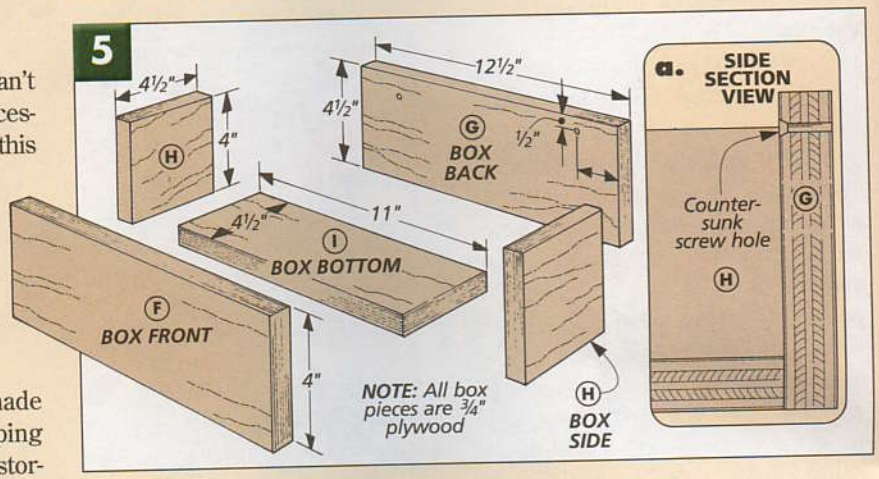

Assembly of the box is simple. I spread glue on all four edges of the bottom piece, then sandwiched it between the sides before adding the front and back pieces.

ALTERNATIVE MOUNTING OPTIONS

These small racks don't take much wall space. Even so, the weight of the clamps will play a big part in where and how you mount the racks.

Pegboard will be suitable for a short rack with small clamps. But it may not be strong enough to hold a rack filled with long pipe clamps.

If you're fastening the racks to drywall, try to find one stud to screw into. The other end of the rack can be attached with a drywall anchor.

Solid wood or plywood (like on the caddy on page 31) will provide the strongest mounting surface for heavy racks.

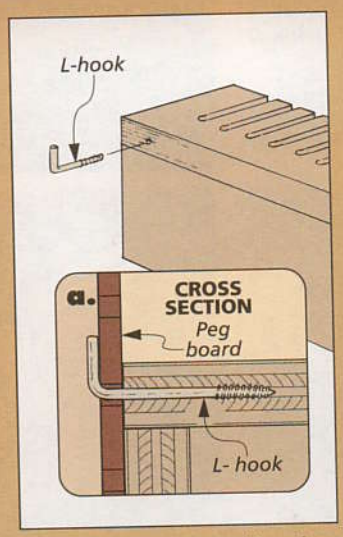

Pegboard. *L-screws driven into the edge of the top allow you to hang a rack on pegboard.*

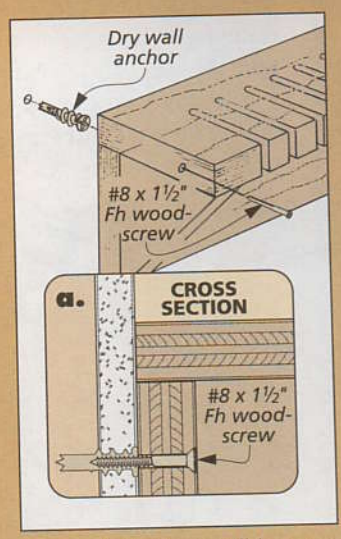

Drywall. *Hollow wall hangers will hold a rack, but try to drive at least one screw into a stud*

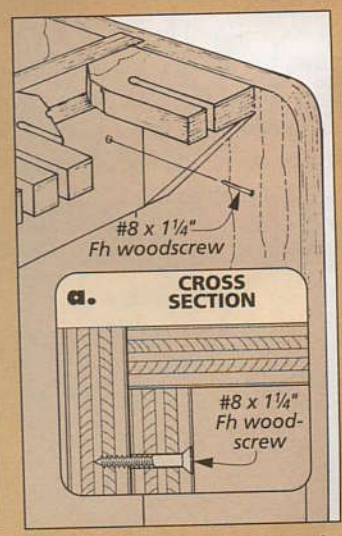

Caddy. *To fasten racks to the caddy, drill pilot and shank holes and use woodscrews.*

Optional Clamp Caddy

While the clamp racks are designed to be small enough to fit just about any available wall space, you might want to consider building this roll-around caddy to hold them. It provides plenty of room to fasten clamp racks and storage boxes.

Two clamp racks will fit between the sides. As shown in the photos below, more racks can be fastened to the outside faces. And best of all, the caddy is mounted on locking swivel casters, so it's easy to roll it to wherever you need it.

The caddy can be made from a single sheet of plywood (with enough left over to make a few racks). The pieces fit together with a series of dadoes and rabbets.

CONSTRUCTION. There are only five pieces in the caddy. So the place to start is by cutting the *sides (J)*, *bottom (K)*, *divider (L)* and *base (M)* to size, as shown in Fig. 6.

Next, dadoes are cut in the sides and bottom to fit the divider (Fig. 6a). Then as Fig. 6b shows, the side pieces also receive a rabbet that accepts the bottom panel.

Before assembling the caddy, I rounded the corners of the base to make it "ankle friendly" (Fig. 6c). The top corners of the sides receive the same treatment.

ASSEMBLY. To assemble the caddy, first glue the divider to the bottom and then add the sides. A few screws along the dadoes and rabbets help reinforce the joints.

There are just a few small things left. One is to screw a locking swivel caster to each corner of the base, as shown in Fig. 6d. Then the caddy assembly is centered on the base and glued and screwed down. Finally, you can attach the racks and fill them with clamps.

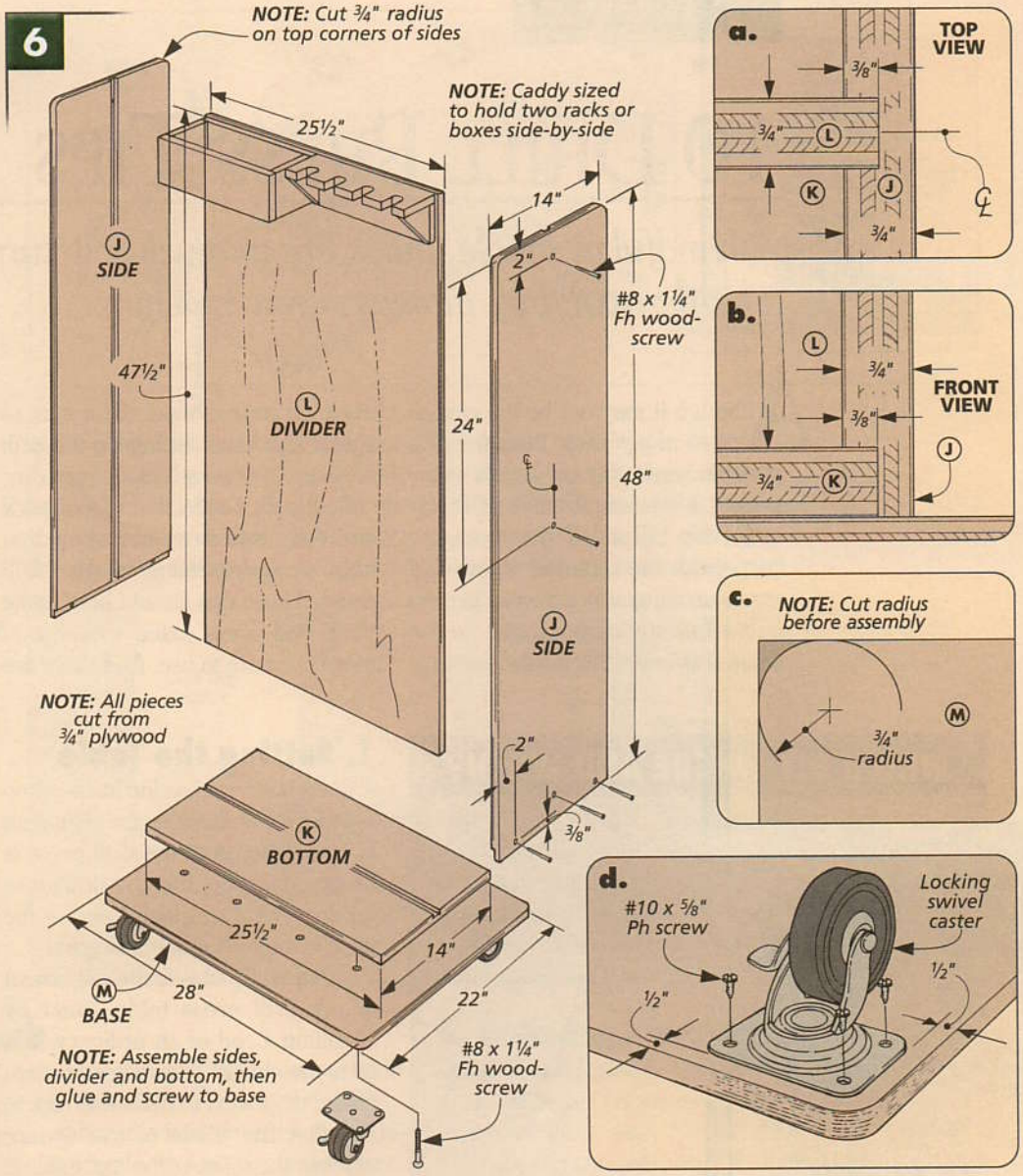

CUTTING DIAGRAM

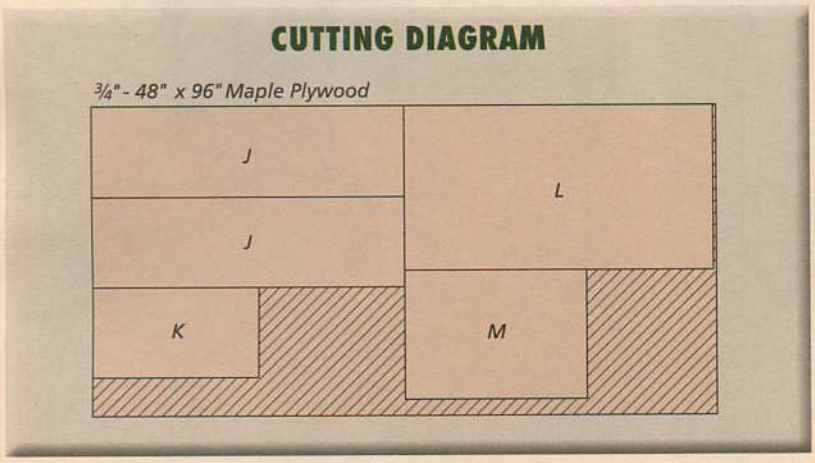

▲ ***Take it for a spin.*** *The four casters on this caddy make it mobile, so you can wheel it over to an assembly and have your clamps (and accessories) right at hand. Plus, the casters allow you to spin the caddy around easily, which means quick access to the clamps on all four sides.*

10 DRILL PRESS TIPS

A handful of simple, quick tips that will help turn your drill press into a harder-working, more accurate machine.

Although it may not be the centerpiece of my shop, I use the drill press in some way on almost every project. It's as valuable as a table saw or jointer, but a drill press doesn't come with the accurate fences and precision gauges found on table saws and other stationary tools. So the setup is as important as the operation itself. Of course, most of us want to spend less time setting up the drill press and more time building projects.

So here's a collection of ten quick and easy tips from our shop that help simplify setting up the drill press. These tips should help make your drill press safer, easier, and more accurate to use. And there are even a few other tips for using your drill press for something other than drilling holes (like installing threaded inserts). Plus there's even a quick table and fence that expands the metal table to triple its size.

These tips are time-saving, simple, and have been proven in our shop. Now try them in yours.

WHICH BIT WHERE AND WHEN?

Twist bits are the most universal and widely available. They can be used in both wood and metal.

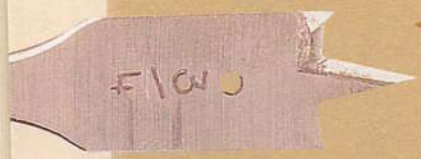

Spade bits are for drilling larger holes in wood only. They're economical and available in larger sizes than twist bits.

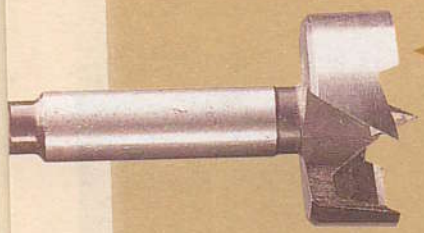

Forstner bits are for drilling flat-bottomed holes with little chip-out in wood only. Their cost is much higher than other bits.

A brad-point bit is a combination of a twist bit and a small Forstner. It is self-centering and cuts flat-bottomed holes.

Woodsmith GO ON-LINE EXTRAS **Speed Chart.** A chart for drill bit speeds can be downloaded from our website: www.Woodsmith.com. (If you don't have access to the internet, see page 35.)

1. Setting the Table

A good habit to develop in the shop is periodically checking the alignment of your tools. And the drill press is no exception. Setting up a drill press for consistent results is easy — the table is the only adjustable part.

I frequently check the alignment of my drill press table. Start by installing a rod or an ordinary drill bit in the chuck. Then align a square on the table next to the bit. Check to see that the blade of the square touches the bit near the top and bottom edges as seen in Fig. 1.

When the table is square, lock it in place. Then as a quick check, set the square against the other side of the bit and verify the alignment.

When setting the table at an angle, many newer drill presses have index markings and an indicator on the table support for making this easy. However, many older drill presses don't have this feature.

A handy way to check the angle is to use the miter gauge from your table saw. The first thing to do is set the miter gauge for the desired angle. Then place the gauge through the center hole in the table. Rotate the table until the bar of the miter gauge is in line with the column of the drill press and the drill bit, as shown in Fig. 2.

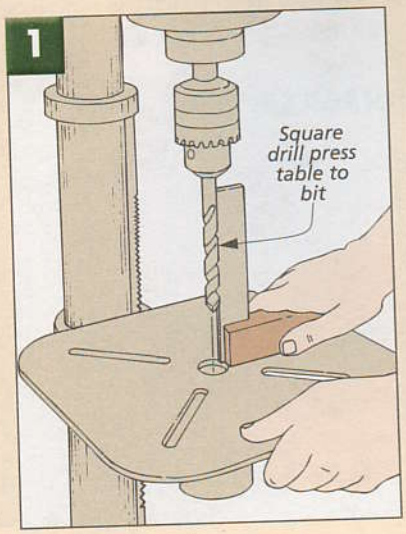

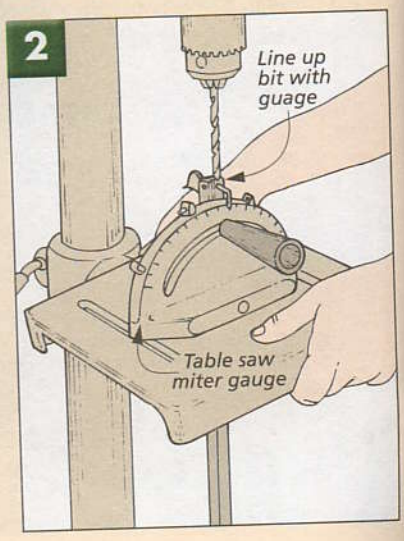

2. Basic Fence & Table

Unlike a table saw, router table, or band saw, a drill press doesn't come with a fence — and the table isn't very big either. So adding an auxiliary table and fence is a good idea.

The table shown at right is a piece of ¾" plywood cut to 16" x 24". The fence is made from "two-by" stock and is cut to the same length as the auxiliary table. A small chamfer is made on the bottom edge of the fence for sawdust clearance.

One end of the fence has a hole drilled for a carriage bolt. The bolt head is recessed into the table as shown in detail 'a' at right. (The other holes allow for greater adjustment when drilling in larger pieces.) A washer and wing nut top off the bolt, which acts as a pivot point for the fence. And a clamp is used on the opposite end to lock it in place. To adjust the fence, loosen the clamp and pivot the fence slightly.

The whole assembly can be mounted to the table with screws, bolts, or with a pair of clamps.

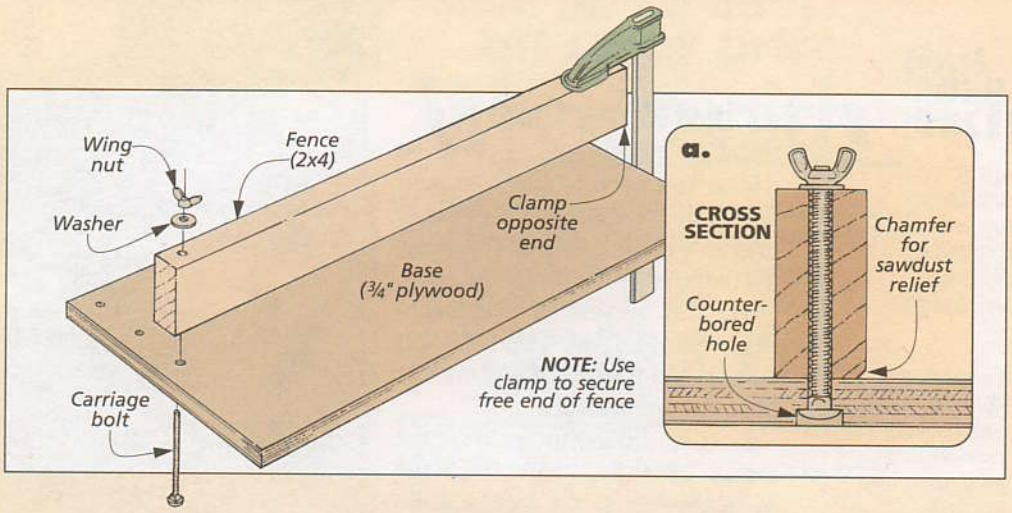

3. Using Bit as a Spacer

When drilling a hole close to the edge of a workpiece, trying to measure from the flat fence to the round drill bit can be difficult. Instead, set the spacing by using a drill bit the same size as the desired distance from the edge of the piece to the hole.

Place the shank end of the spacer bit between the fence and the bit being used. Then adjust the fence so the spacer is just touching both.

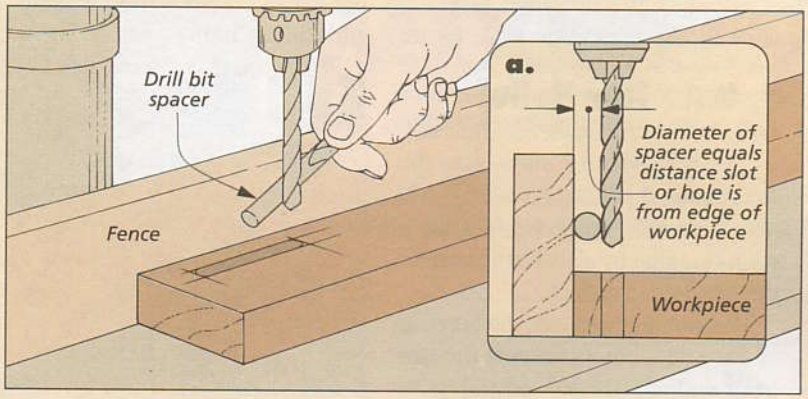

6. V-Notch. *Cutting a notch in the fence prevents the chuck from rubbing when drilling close to the fence or when using short bits.*

4. Finding Center of Stock

Drilling overlapping holes is a quick way to rough out mortises. But centering the bit on the workpiece can be a real challenge sometimes.

Instead of taking an extra step in marking out the center of the stock, I use this quick and reliable method.

Set the fence by eye at first. Then drill a shallow hole on a test piece to show the location of the bit, as in the drawing below. Next flip the piece end-for-end and drill another shallow hole directly on top of the first.

If two distinct outlines of the bit are visible, the bit is not centered. Adjust the fence slightly and test again. When the two holes line up perfectly, the bit is centered.

This technique works best with a Forstner or brad-point bit. Their design produces outlines that make it easy to see the location of the bits.

5. Framing Square Tip

Often I need to make a small run of identical pieces for a project. And if a hole needs to be drilled in each piece in the same spot, try using a framing square. The square acts as both a fence and a stop block.

Just place the workpiece under the bit where the hole will be drilled. Then set the square around the workpiece and clamp it to the drill press table as shown below.

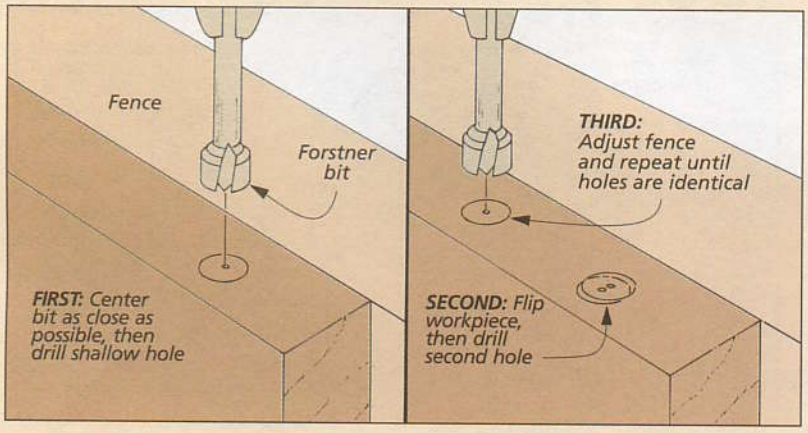

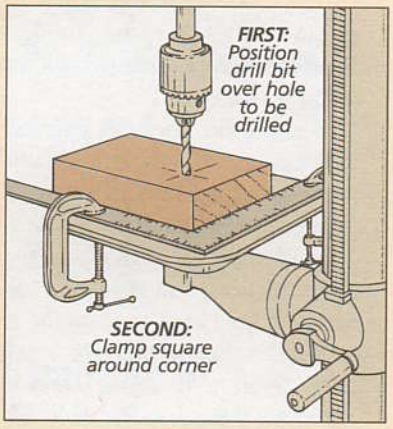

7. Installing Inserts

Installing a threaded insert can be tricky. You need to apply enough downward pressure to get the threads to grab, while at the same time keeping the insert from going in crooked.

The drill press is an ideal tool to help with this. It will keep the insert square, and it lets you apply plenty of downward pressure.

Start by drilling the hole for the insert. Then find a bolt with the same threads as the inside of the insert and cut the head off the bolt.

Now before you chuck the bolt into the drill press, thread the insert onto the bolt along with a pair of hex nuts, see detail 'a' at right.

Installing the threaded insert is next. First position the piece under the insert and clamp it to the table.

Then slowly turn the chuck clockwise *by hand*, as shown in the drawing above. At the same time, slowly add moderate pressure on the quill feed lever, and the insert will begin tapping itself into the wood.

Once the insert is threaded, lock the spindle in place. Then, loosen the lock nuts and remove the bolt.

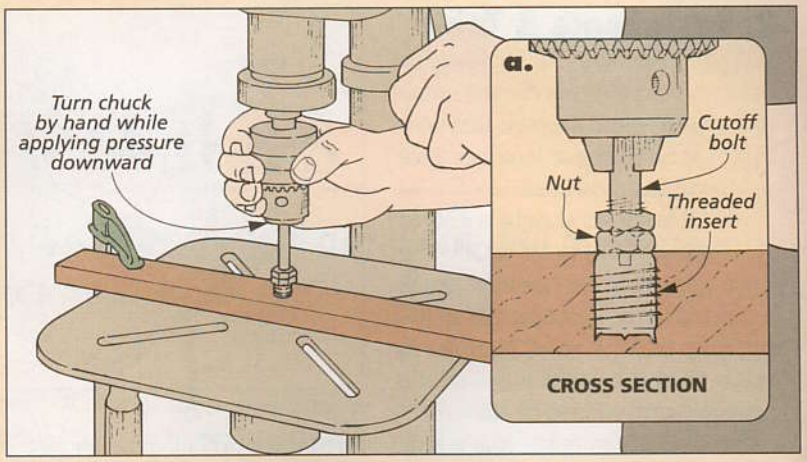

8. Hole Saw Relief

When using hole saws, the small saw teeth cut slowly and often burn the workpiece. But a clearance hole will help solve this. It prevents the teeth from clogging by allowing a place for the sawdust to collect.

This not only reduces the burning of the wood, but it prevents the saw from dulling. Another advantage is that since the sawdust is removed, the saw is able to cut much faster.

First, start with a hole saw and make a cut just deep enough to see the outline of the saw (Fig. 1).

Next, drill a relief hole on the cut line left by the hole saw, as shown in Fig. 1. (A Forstner bit works best.) Finally, reinsert the hole saw and complete the hole (Fig. 2).

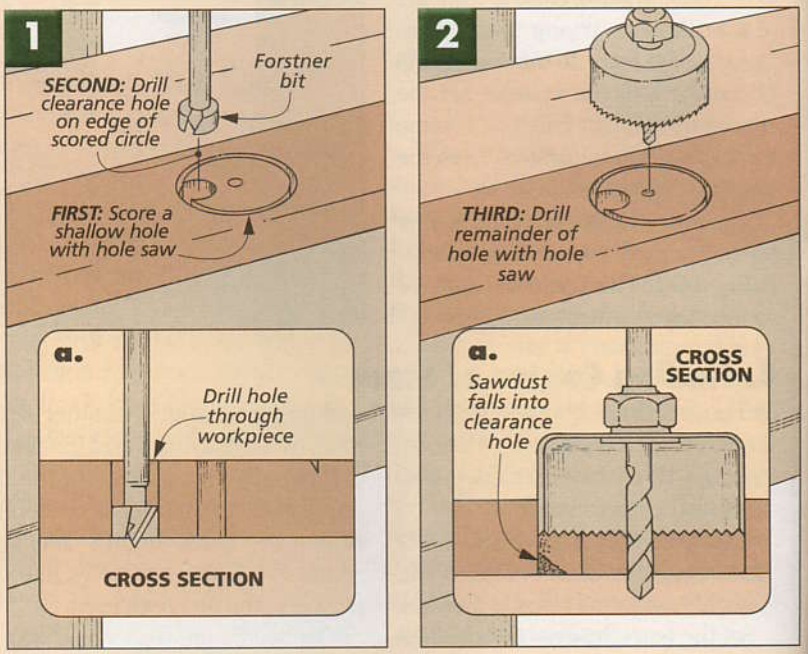

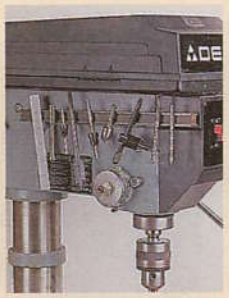

10. Accessory Bar. *Placing a magnetic bar on the housing of the drill press provides a handy storage place for small accessories.*

9. Drilling on the Round

To make drilling a hole in round stock a snap, I use a simple V-block. It improves the accuracy of the holes being drilled by aligning the bit dead center on the stock.

To make the block, set your table saw blade at a 45° angle. Then make two intersecting cuts to form a 90° channel the length of the block.

Positioning the V-block is just a matter of using a small bit or a pointed rod in the chuck to align the bottom of the channel with the rod tip, as in detail 'a' at right. Then just clamp the V-block to the table.

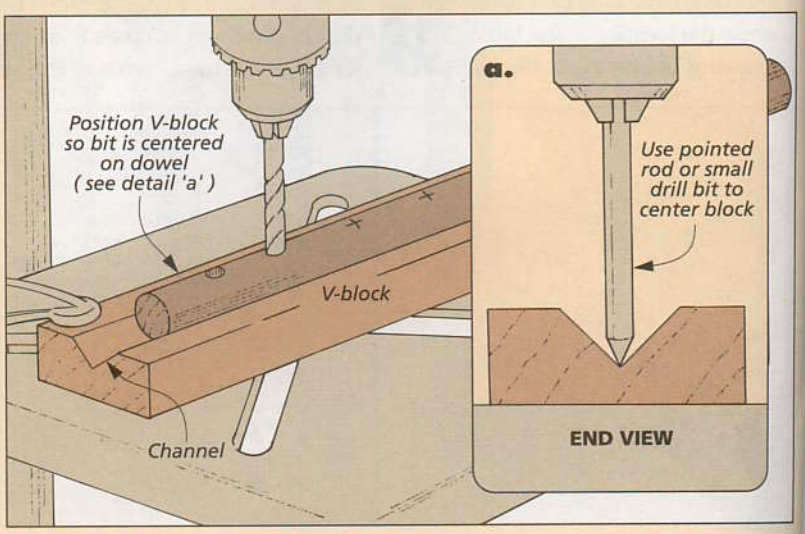

SOURCES

ARTS & CRAFTS CLOCK

For the Arts & Crafts clock, you'll need a quartz clock movement, hands, and a dial face, like those shown in the photo at right.

For the clock face, you'll want one with a dial diameter of at least 4⅛". (This is the measurement from one outside edge of the face to the other.) The time ring diameter should be about 3¾". (This is the part of the dial you'll see with the numbers and time markings on it.)

I ordered my parts from *Klockit*. Their phone number and web address are in the margin. Here are the part numbers for the pieces I used: the clock face is 26541, the hands are 67916, and the quartz movement is 10082.

WING CUTTER. To cut the hole in the face of the clock, I used a wing cutter. These can be found at some hardware stores and home centers or from several of the mail order sources listed at right.

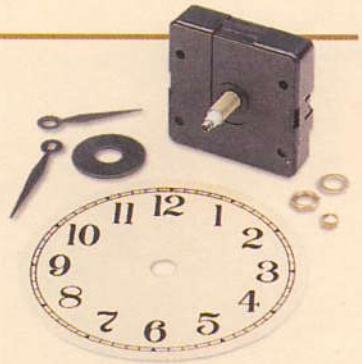

▲ *A battery-powered clock movement is the heart of the Arts & Crafts clock on page 18.*

CRAFTSMAN-STYLE CABINET

The cabinet on page 6 combines traditional and modern hardware. The pulls on the drawers and door add to the period look of the cabinet. The drawer slides are a modern convenience that allow you to pull the drawers all the way out so you can reach even the back corners.

PULLS & HINGES. The angular ring pulls and butt hinges came from *Horton Brasses*. (Contact information is in the margin.) The ring pulls are a mission-style pull (part MS-13) and measure 1⅝" x 2¼". When attaching the pulls to the drawers, you'll need to substitute longer machine screws (8-32 x 1½").

The hinges for the door should be fairly common (see the list at right). They're just 1⁹⁄₁₆" x 2" butt hinges with an antique brass finish.

DRAWER SLIDES. The drawers are mounted on 16" full-extension drawer slides. These are carried by many home centers and hardware stores as well as the sources listed here.

BARRISTER'S CD CASES

The only hardware needed to build the CD cases on page 22 is a small brass knob for each door, a few woodscrews, and glass panels for the doors.

KNOBS. The brass knobs are available from some of the sources listed at right. The ones I used have a screw stud so they can be driven right into the lower door rail. This is made easier if you drill a pilot hole.

GLASS. When I make a door with a glass panel, I wait until the door is built before having the glass cut to size. For the CD cases, just measure between the rabbets on the back of the door and subtract ⅛" from each measurement to allow a bit of "breathing room."

FELT DOTS. The self-adhesive felt dots that keep the door from banging against the case can be found at craft and hobby stores. You might even find them in a hardware store.

ONLINE EXTRAS

To really get the most out of your drill press (and to use it safety), it's important to run the bits at the proper speed You can download a free drill press speed chart from our web site (see box below). To have a copy mailed to you, send a self-addressed, stamped #10 envelope to:

Woodsmith Drill Press Chart
P.O. Box 842
Des Moines, IA 50304

MAIL ORDER SOURCES

Similar project supplies and hardware may be ordered from the following companies:

Horton Brasses Inc.
800-754-9127
www.horton-brasses.com
Craftsman-style cabinet ring pulls, Hinges

Lee Valley
800-871-8158
www.leevalley.com
Small brass knobs, Drawer slides

Klockit
800-556-2548
www.klockit.com
Clock movements, dials, & hands

Rockler Woodworking
800-279-4441
www.rockler.com
Small brass knobs, Hinges, Wing cutters, Drawer slides, Clock movements & hands

Woodcraft
800-225-1153
www.woodcraft.com
Small brass knobs, Hinges, Wing cutters, Drawer slides, Clock movements & hands

Woodsmith Store
800-835-5084
Small brass knobs, Wing cutters, Drawer slides, Clock movements, dials, & hands

Woodworker's Supply
800-645-9292
Small brass knobs, Hinges, Wing cutters, Drawer slides, Clock movements & hands

WOODSMITH PROJECT SUPPLIES

If you would like to order back issues or a hardware kit from *Woodsmith Project Supplies*, please use our Toll-Free order line, see below. It's open Monday through Friday, from 8 AM to 5 PM Central Time. Before calling, please have your VISA, MasterCard, or Discover card ready.

If you would prefer to mail in your order, please call the number below for more information concerning shipping charges as well as any applicable sales tax.

1-800-444-7527

Woodsmith *on the web*

- "Online Extras" - Plans, Patterns, & More
- Over 100 Woodworking Tips Online
- Visit Our Readers' Project Photo Gallery
- Project Plans You Can Download
- Catalog of Project Kits, Tools, Jigs, & Plans
- Forums for Woodworking, Tools, & Classifieds
- Links to Other Woodworking Sites
- Order *Woodsmith* & *ShopNotes* Back Issues

www.woodsmith.com

Online Customer Service
Click on Subscriber Services at
www.woodsmith.com

- Access your account status
- Change your mailing or email address
- Pay your bill
- Renew your subscription
- Tell us if you've missed an issue
- Find out if your payment has been received

Final Details

▲ **Craftsman-Style Cabinet**. *This well-proportioned cabinet has traditional Craftsman details but is built with modern conveniences like plywood and metal slides. Complete plans can be found on page 6.*

▲ **Clamp Storage**. *Compact, convenient, and ready to customize, this easy-to-build caddy puts clamps at your fingertips when you need them and rolls out of the way when you don't. Step-by-step instructions begin on page 28.*

Barrister's CD Cases. ► *Like a full-sized barrister's bookcase, the doors here flip up and slide into the case. And the sections stack on top of each other, so the project can "grow" with your collection of CDs. Plans start on page 22.*

▲ **Arts & Crafts Clock**. *A few dollars and a few hours are all you need to build this handsome clock. Turn to page 18 for details.*